2024 PARTS AND SALES CATALOG

Spray Advantage

"EVERYTHING YOU NEED FOR FERTILIZER AND CHEMICAL APPLICATION"

Local: 701-775-8089 Fax: 701-775-8217

Toll Free: 866-775-8089

www.sprayadvantage.com

TERMS & CONDITIONS

Special Information You Need to Know...

Defective Material: Our liability is limited to the value of the defective materials.

* Claims for damaged or expenses resulting from the use of any product furnished by or through Spray Advantage are not allowed.
* Parts furnished to Spray Advantage by other manufacturers for resale or assembly by the company is subject to the warranty of the manufacturer.
* Warranty claims will be processed by Spray Advantage under that suppliers company's warranty when items are returned to Spray Advantage.
* Freight charges are not covered under warranty policies.

Returned Items: If for any reason a return is necessary, please advise Spray Advantage in advance for the reason of the return.

***Returned goods must be in salable condition and be accompanied by an invoice or sales order.**
***Merchandise must be returned within 15 days or a restocking charge may be imposed.**
We reserve the right to treat any returns as store credit only.

*** NON-STOCK or SPECIAL ORDER items are NONRETURNABLE.**
*** NO RETURNS OF ANY CUT LENGTH OF HOSE.**
*** 20% RESTOCKING FEE ON ALL ELECTRICAL COMPONENTS.**
*** NO RETURNS AFTER 30 DAYS.**

Credit and Billing: Orders will ship on open account for customers that have prior approved credit status. All invoices 30 days past due will be subject to a service charge of 1-1/2% per month (18% Annual) on the unpaid balance until final payment is received.
All checks written in payment of merchandise must be made payable to Spray Advantage.
Credit for returns will be applied to original invoice and then to oldest open invoice.
Overpayment will be applied to oldest open invoice.
Major credit cards are accepted. (VISA, Mastercard, Discover & American Express.)

Taxes: Pricing in catalog does not include state or local tax.
Taxes will be charged unless an up-to-date/completed Certificate of Resale or Certificate of Exemption is on file with Spray Advantage.

Shipping: All prices within this catalog are FOB shipping point. Normally the shipping point is our warehouse, but we reserve the right to ship from other points at our discretion. Shipping charges are the responsibility of the customer. We ship Spee Dee Delivery, UPS and USPS.

*** On all orders received before 3p.m., we will make every effort to ship them same day.**
*** All orders received after 3p.m., will be shipped the next day.**

NOTE: Prices shown in this catalog are current to the best of our knowledge.
However, prices may change at any time without notice or obligation.
PRICES CHARGED WILL BE CURRENT AT THE TIME OF SHIPMENT.
Not responsible for typographical errors.

TABLE OF CONTENTS

CHECK VALVES
PVC CHECK VALVES 87

CONTROL VALVES
MICRO-TRAK SERVO VALVE 39
RAVEN CONTROL VALVES 48

CONVEYORS & AUGERS
HUTCHINSON/MAYRATH 222

CROPSAVERS
CROPSAVERS 10

ELECTRONICS
AGCAM REAR VISION SYSTEM 14
KB CENTER LOAD 5
KB DRIVER LINX 6
KB HARVEST MONITOR 7
KB INJECTION MONITOR 8
KB START/STOP SWITCH 7
MICRO-TRAK CUSTOM SYSTEMS 38-39
MICRO-TRAK MONITORS 31-32
MICRO-TRAK NH3 CONTROLLERS 35
MICRO-TRAK RATE CONTROLLERS 32-34
MICRO-TRAK REPLACEMENT PARTS 40-41
MICRO-TRAK ELECTRIC PUMP DRIVE 37
OVERVIEW REAR VISION SYSTEM 15
RAVEN CABLES & PARTS 49-50
RAVEN CHEMICAL INJECTION 46
RAVEN CONTROLLERS 43-45, 82, 84
TIR CONTROLLER 54
TEEJET/MIDTECH GPS PRODUCTS 51
TEEJET CONTROLLERS & PARTS 52-53
TEXAS INDUSTRIAL REMCOR 55
VISION WORKS 16
WILGER FLOW MONITOR 42

FIRE NOZZLE
FIRE NOZZLE 148

FITTINGS
CAM-LEVER COUPLERS ALUMINUM 67
CAM-LEVER COUPLERS POLY 68-69
GARDEN HOSE 62
MANIFOLD - BANJO 70-74
PIPE SEALERS 66
POLY 56-61
PUSH-ON TUBE 88-89
SCHEDULE 80 POLY 56-61
STAINLESS STEEL 56, 63-66
STEEL 56, 63-66

FLAGS FIELD MARKING
BIO & COLORED 11

FLOW METERS
MICRO-TRAK 39
RAVEN 47
TEEJET 53

FOAM MARKERS
FOAM MARKERS & PARTS 11

FORMULAS
USEFUL FORMULAS & INFO 223

GAUGES
ANHYDROUS AMMONIA 98
BACKMOUNT 98
GLYCERINE FILLED 98
SPRAYER 98
GAUGE ADAPTERS 98
CHEMICAL ISOLATOR 55

GRAIN CARTS & SEED TENDERS
MERIDIAN SEED TENDER 220
J & M GRAIN CART 221

HOSE
ANHYDROUS AMMONIA 96-97
BRAIDED VINYL 92
CHEMICAL TRANSFER 91
DISCHARGE 93
EVA TUBING 92-93
LINEAR GAUGE TUBING 89
PVC SPRAY 90
RUBBER SPRAY 91
SIGHT GAUGE 92
SUCTION 90-91

HOSE ACCESSORIES
HOSE REELS 94
PLASTIC HOSE CLAMP 206
T-BOLT HOSE CLAMP 95
WORM GEAR HOSE CLAMP 95

MISCELLANEOUS
AUTOBATCH METER 193
DRY/LIUQUID APPLICATOR 9
TILLAGE TOOLS 209

MICRO-MATIC COUPLERS
MACRO VALVE 204
DRUM VALVE 204

NH3
ACME ADAPTER 217
ACME COUPLER 217
PIONEER COUPLER 218
RELIEF VALVE 218
LIQUIFIER 36
TORPEDO-HITCH 211
TUBES & KNIVES 216
VERTICAL DAM MANIFOLDS 216
APPLICATION ACCESSORIES 219

NOZZLE ACCESSORIES
ADAPTERS 143
NOZZLE BODIES TEEJET 137-141, 144-145
NOZZLE BODIES QUICK TEEJET/PUSH-ON 142
NOZZLE CLAMPS 143
WILGER NOZZLE BODIES 152-153

PTO ADAPTERS
PTO ADAPTER 160

PUMPS
CENTRIFUGAL PUMP-ACE 179-181
CENTRIFUGAL PUMP-HYPRO 166-167
CHEMICAL TRANSFER PUMP 193-199
DEF PUMP 213
DIAPHRAGM PUMP-HYPRO 168
EVERFLO PUMP 192
FUEL TRANSFER PUMP 214-215
MANIFOLD 155, 158
ROLLER PUMP-HYPRO 159
SHURFLO PUMP/PARTS 190-191
TRANSFER PUMP-BANJO 154, 156
JOHN BLUE 157

PUMP REPAIR PARTS
CENTRIFUGAL PARTS-ACE 182-189
CENTRIFUGAL PARTS-HYPRO 169-174
DIAPHRAGM PARTS-HYPRO 175-178
ROLLER-HYPRO 161-165

RADAR
MICRO-TRAK ASTRO 37
RAVEN 47
TEEJET 53

RINSE NOZZLES
EDUCTOR NOZZLE 149
JET RINSE 206
RINSING NOZZLE-SPRAYING SYSTEMS 149

SAFETY EQUIPMENT
COVERALLS 205
GLOVES 205
GOGGLES 205
RESPIRATOR 205

SPRAY ACCESSORIES
COVERALLS 205
GLOVES 205
GOGGLES 205
JET RINSE 206
PLANTER KITS 200-201
RESPIRATOR 205
WILGER FLOW TUBES 203

SPRAY GUNS
FIRE NOZZLE 148
FUEL NOZZLE 214
HYPRO GUN 148
TEEJET GUNS & TIPS 147

SPRAY TIPS
CAPS & GASKETS 110
NITRO BARS 211
ORIFICES 136, 203
SCREENS & STRAINERS 146
TIPS-TEEJET 111-136
TIPS-WILGER COMBO-JET 150-151

SPRAYERS
ATV SPRAYER 17, 19
BACKPACK SPRAYER 208
FIELD BOSS 20
FIRE RANGER 21
FOAM RANGER 21
HAND SPRAYER 208
LAWN SPRAYER 17, 19
MASTER GARDEN SPRAYER 208
UTV SPRAYER 18, 19

STRAINERS
KLEEN FLO LAKE STRAINER 101
LINE STRAINER-HYPRO 99
MANIFOLD STRAINER-BANJO 76-78
STRAINER-TEEJET 103
T & Y STRAINER-BANJO 84, 100-102

TANKS
AGRI-PRODUCTS TRACTOR MOUNTED 13
DEF TANK 212
DEMCO TRACTOR MOUNTED 12
DIESEL TANK 214
INDUCTORS & ACCESSORIES 27 & 30
NURSE TANK 22
POLY TANK 24-26
PORTABLE STORAGE 23
SAFETY RINSE TANK 27
TANK ACCESSORIES 28-29
TRANSPORT 23
BATCHMASTER 30

TRAILER/FUELMATE
FUELMATE 221

VALVES
12 VOLT CONTROL & SHUT-OFF 106
BOOM CONTROL VALVE 105
PRESSURE RELIEF & THROTTLING 104

VALVES, BALL
BALL VALVE-BOLTED 75, 81, 83-86
BALL VALVE-NORWESCO 79-80
UNION VALVE 86
BRASS VALVE 87
ELECTRIC BALL VALVE-BANJO 107-109
ELECTRIC SOLENOID 55
MICRO VALVE 86-87
STAINLESS STEEL BALL VALVE 87
VALVE PARTS-BANJO 85

NEW PRODUCTS

BANJO®
Liquid Handling Products

- ✓ 13 HP Honda Motor w/ electric start
- ✓ Rated at 450 GPM
- ✓ Wet Seal Technology Allows pump to be run dry with no damage to mechanical seal
- ✓ 3" Manifold fittings for easy plumbing

Ace Roto-Mold
A DIVISION OF DEN HARTOG INDUSTRIES, INC.

Closet Tank

SP0300-UT - 300 Gallon Utility Tank

The 200, 300 and 400 Gallon Utility Tank is a freestanding narrow rectangular tank for indoor or outdoor stationary applications. The tank is designed for narrow installations and can be inserted through doorways that are 30″ or greater in opening.

Tank Specifications and Features:
– Furnished with a 16″ vented lid assembly with a 16″ tether as standard equipment.
– 1 1/2″ FPT heavy-duty polypropylene fitting with Santoprene gasket is standard
– Tank features top & bottom flats on each end
– U.S. and metric level indicators are included on each end of the tank
– Tanks are designed for the containment of chemicals with a specific gravity of 1.7 or less.

NEW PRODUCTS

MIC

Multi-Product Induction Cone

- The Multi-Product Induction cone enables you to never use a 12volt chemical pump again.
- MIC utilizes an oval gear meter that is factory calibrated to be +- .5% and being a gear meter, you don't have to change calibration between products. Features 1/10th gallon increments, back light display.
- Installs on the pressure side of your pump so you will never have chemical going through your pump.
- Reduces chemical exposure
- Eliminate chemical cross contamination
- 60 gallon total drain cone tank with lockable hinged lid.
- 3" plumbing but will also work with a 2" pump
- Induct up to 4 products through the meter at a flow rate up to 20 GPM
- Tank rinse and manifold rinse
- Common option include the CHEM-BLADE or Jug rinse

Now available at Spray Advantage

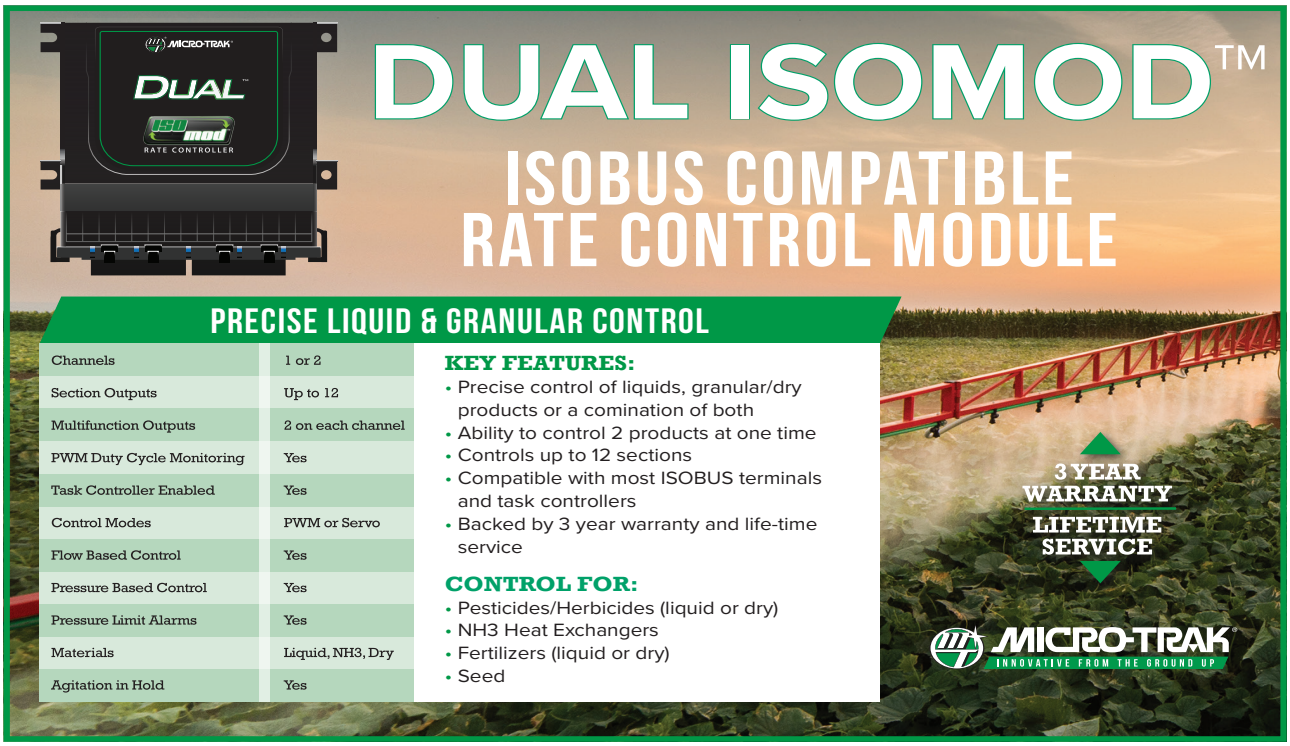

KB PRODUCTS

CENTER LOAD

KB-CL $725.00 Y

* KB Manufacturing, LLC, has designed a new aid for loading trucks, carts or other vessels.
* The primary purpose is to more evenly place product for improved stability.
* Light indicators provide dual signals to both the loader and loadee.
* Every unit is measured with sonar prior to loading, establishing a customized center point.
* A green light illuminates when the optimal load is achieved. When the loading area is too far in or out, a red light will be illuminated.
* System is designed to help reduce operator fatigue and allow more attention on proper harvester settings.

Sensor is mounted on the loading equipment, such as a harvester. The sensor, along with microcontroller board, determine the distance for optimal placement for a centered load. ***This unit is used in conjuction with KBMFG patented Drive Linx System.*** This alerts the driver in the unit being loaded to move in the direction of the wireless display unit. The operator can adjust the distance and load zone from the comfort of their cab. This helps reduce operator stress and also helps maintain a safer, center loaded truck, cart or vessel.
Patent Pending.

KB PRODUCTS

DRIVER LINX

Wireless Direction Light

KB-LINX $690.00 NET
(1 Transmitter, 2 Receivers)

ADDITONAL:
KB-LINXT $265.00 NET (Transmitter)
KB-LINXR $265.00 NET (Receiver)

Wireless External Light

KB-LINXEW $680.00 NET
(Wireless Light)

KB-LINXEW/KIT $945.00 NET
(Wireless Light, 1 Transmitter)

FEATURES:

* Transmitter runs off of a 9-Volt battery.
* Receiver powered by plugging into a cigarette lighter.
* Easily transfer between equipment pieces.
* Units are small and install in minutes.
* Visual light shows direction of movement desired.
* Buzzer alarm to alert driver of a change.
* Mounts on dash for easy viewing.

PRODUCT USE:

Loading trucks, grain carts and beet carts for harvest.
Loading and unloading of railcars or trucks at elevators and warehouses.
Mining, highway departments, agriculture warehouses and many other loading and unloading facilities.
Communicating between two or more vehicles when visibility is obstructed

"Taking you in the right direction"

(866)775-8089
FAX (701)775-8217

START-STOP APPLICATION SWITCH

KB-SC $550.00 Y

Have you ever forgotten to flip a switch on th start an application of a product?
Have you ever accidentally left the switch on?

Reduce you chance on leaving a switch on and burning your crops. This motion activated switch starts the application of the product when your machinery starts moving. Application stops when you stop. An Override switch allows the operator to turn the system on when stopping to check flow to the rows or check calibration. A status light allows the operator to visually see when the system is in an active state or non-active state. Safe and easy to operate.

HARVEST MONITOR

GK Technology For Agriculture

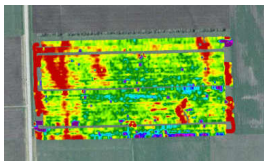

KB-HARVESTM - CALL FOR PRICING

The Harvest Monitor was developed to aid in the loading of trucks and also to see variability within the fields. The monitor tracks truck weights and can be tarred after each load.
KB Manufacturing has teamed up with GK Technology to combine software and hardware for a conveyor type yield monitor.
Now you can track and view areas of your field that are not as productive or areas that produce higher yields. Are the areas affected by water damage, disease issues, variety change, fertilizer change, plant populations, or other field conditions? Yield monitoring can validate some of the choices that you make.

DIGITAL RPM MONITOR

KB-SHAFT - CALL FOR PRICING

This unit will monitor up to 10 shafts. It will alert the operator of shaft speeds that have slowed down or stopped. The minimum shaft speeds can be set by the operator. If two or more shafts are below the set speed the alarm will sound for a few seconds and the alarm light will stay on. This feature allows for reducing the PTO speeds on the end of a pass with out a continuing alarm sound. The monitor can scan each channel and display the speed of each shaft.

DIRECT INJECTION MONITOR

* Ability to monitor up to four platforms or products at the same time.

* Monitoring may be done by manual touch or automatic scan mode.

* Audible low-limit alarm to warn the operator of low products.

* LCD screen with back lighting for easy viewing.

* Optional product platforms that securely attach to sprayer.

KB-INJECTIONM - CALL FOR PRICING

(866)775-8089
FAX (701)775-8217

Maximizing your yield starts by treating your seed.

Dry Applicator

To obtain the best use of your treatments, you need to treat the seed as close to planting as possible. The CT Dry Powder Applicator does just that - it can be used in-field or while filling the seed tender. Our patented CT Dry Powder Applicator will meter talc, inoculants, graphite or any dry product evenly and accurately. This applicator applies your seed treatments in the field when you are ready to plant. The CT Dry Power Applicator can mount above an auger or conveyor and treats seeds just before they are planted. Seeds will be evenly coated as they travel to the planting devise. You can also purchase an auger system that will move the dry product from the applicator to the hopper before the seed enters the conveyor, auger or air delivery system. This system can also be set up to treat seed ahead of planting time.

PART# CTDRY6-12 (6 gallon, 12-Volt) **$2,560.00 NET**
PART# CTDRY6-110 (6 gallon, 110 motor) **$3,775.00 NET**
PART# CTDRY14-110 (14 gallon, 110 motor) **$4,155.00 NET**
PART# CTDRY21-110 (21 gallon, 110 motor) **$4,425.00 NET**

* hands free system
* Stainless steel cone
* Waterproof variable speed controller

Liquid Applicator

To obtain the best use of your treatments, you need to treat the seed as close to planting as possible. The CT Liquid Applicator does just that - it can be used in-field or while filling the seed tender. Our CT Liquid Applicator can be used to evenly apply any liquid seed treatment that can be farmer applied or applied with applicable license. This applicator applies your seed treatments in the field when you are ready to plant.

PART# CTLIQUID5 (5 gallon, 12-Volt) **$1,200.00 NET**
PART# CTLIQUID10 (10 gallon, 12-Volt) **$1,410.00 NET**

* continuous agitation pump
* drain for easy clean out
* in-line clear bowl filter
* pressure gauge, adjustable ball valve and orifice for rate regulation

*** Dry and liquid applicators can be used separately or together**
*** Allow farmers to apply products needed at time of planting**
*** Saves farmers labor, time and money**
*** Can be used with any seed delivery system**

Are you driving over your money?

CROPSAVER ADVANTAGES:

* REDUCE TRAMPLING LOSS BY 80-90%
* A SET OF CROPDIVIDERS WILL PAY FOR THEMSELVES AFTER SPRAYING LESS THAN 1,000 ACRES
* CAN BE USED IN A VARIETY OF SOLID SEEDED AND ROW SEEDED CROPS
* SAVES FLAG LEAF DAMAGE WHEN SPRAYING FUNGICIDES AND HERBICIDES
* CAN ALSO BE USED FOR DESICCATING OR PREHARVEST BURN DOWN
* EASIER SWATHING, COMBINING AND TILLAGE WHEN GRAIN IS NOT TRAMPLED

Tridekon has 6 Cropsaver Cone Models - All intercharngeable

Standard Narrow Cones
are the most commonly used.

Standard Wide Cones
are for sprayers with wide tires.

Chopped Cones
have the tops cut off for clearance on some sprayers.

Short Cones
are recommended for the rear tires on articulating machines and models with clearance issues.

Bean Cones
are designed to run low in the crop enabling it to et under vines. Recommended for beams and other row crop.

Step Cones
are available for machines where the sprayer's ladder interferes with the Cropsaver.

CALL FOR PRICING

(866)775-8089
FAX (701)775-8217

FOAM MARKERS

SUPER MARKER FEATURES:

* 12V DC Operated
* 3-Position Switch Enclosed in Weatherproof Cover
* Two Stage Foam Generation
* Boom end Mounted Foam Chamber
* 150' delivery hose (FM14/FM25 Only)
* 4" Fluorescent Drop Boots for Visibility

PART#	DESCRIPTION	PRICE
FM-14	14 GALLON MARKER COMPLETE	1,153.00 **Y**
FM-25	25 GALLON MARKER COMPLETE	1,206.00 **Y**
FOAM	GALLON FOAM CONCENTRATE	66.50 **Y**
UNFOAMERG	GALLON ANTIFOAMING AGENT	62.00 **NET**
UNFOAMERQ	QUART ANTIFOAMING AGENT	33.25 **NET**
CFM1009	DROP BOOT ASSEMBLY Fm14 & Fm25	22.40 **Y**

NON-PRESSURIZED SYSTEM
SIMPLY ADD WATER AND FOAM CONCENTRATE

FIELD MARKING FLAG

PART#	DESCRIPTION	PRICE
FFC	6' FIELD FLAG ORANGE w/9" x 11" PENNANT (1)	10.50 **Y**
FLAGBIO	WHITE BIODEGRADEABLE WOODEN DOWEL (48)	63.00 **NET**
FLAGB	BLUE FIELD FLAG (100)	28.00 **S**
FLAGO	ORANGE FIELD FLAG (100)	28.00 **S**
FLAGW	WHITE FIELD FLAG (100)	28.00 **S**

DEMCO TRACTOR MOUNTED TANKS

SIDE MOUNT TANK UNITS FOR JOHN DEERE TRACK DRIVE TRACTORS

FEATURES:

* Two 350 or 500 gallon high capacity side mount tanks with 16” fill-well.
* Better visibility - tanks are mounted longitudinal for superb visibility.
* Comfortable transport width.

QUICK TACH IN-LINE SIDE MOUNT TANK UNITS

FEATURES:

* Demco’s in-line tanks are available in two sizes: 200 or 300 gallon capacities. They feature dual jet agitator, sump, molded sight gauge and fill-well with a no-splash cover.The 300 gallon tank has poly baffle.
* High clearance brackets allow for approximately 30” of ground clearance. TRANSPORT WIDTH: 16’6”

600 GALLON QUICK TACH - 4WD articulating tractor

FEATURES:

* Two 300 gallon tanks. They feature dual jet agitation, sump, molded sight gauge and 12” fillwell withno-splash cover.
* High clearance brackets include saddles, tank bands, carrier brackets and all necessary bolts for a complete installation.
  22-25” ground clearance. TRANSPORT WIDTH: 15’

400 & 500 GALLON REAR MOUNT SPRAYER UNITS

FEATURES:

* 300, 400 or 500 gallon tank with jet agitation, molded sight gauge, sump and fillwell with no-splash cover.
* Rear mount brackets are complete with saddles, tank straps and all necessary bolts.
* Category 2 or 3 rear mount brackets may be used with “Quick Attach” three point hookup.
* Large convenient platform with safety rail and ladder for easy filling of tank.
* Retractable built in ground stand for storage when empty.
* A clean water tank is conveniently mounted on the rear mount unit.
* Available with single section electric control for disc spray kits or three section electric controls for boom spraying.

CALL FOR PRICING

(866)775-8089
FAX (701)775-8217

Agri-Products Inc.

FEATURES:

* Parallel mounting of tanks allows for excellent cab visibility
* All steel components are powder coat paint
* Tank mounts are available to accommodate inboard and outboard trac tractors and tractors with front duals
* Front-mounted tanks are available on all wheeled tractors
* All tanks carry a 3-year limited warranty
* Manufacturer limitations and specs are taken into consideration in this design
* Tank mounts are also available for tractors with FRONT DUALS
* 500 gallon side mounts are available on some models

CALL FOR PRICING

FEATURES:

* These tanks are offered in 300-gallon only
* All steel components are powder coat painted
* 3-year limited warranty
* Actual mounting varies with different models
* Installation is simple and fast
* Manufacturer limitations and specs are taken into consideration in this design
* Front-mounted tanks are available on most tractors

The AgCam camera system is the most durable, dependable and user friendly camera system available to the agricultural, industrial and public works market today.

SINGLE & DOUBLE CAMERA KITS

* 3.6mm AHD cameras - 1 Single, 2 Double
* 7" OR 9" LED Analog High Definition monitor w/4 camera inputs
* A total of 80' of power/video cable for each camera (1 - 60' & 1 - 20')
* Remote
* 12v cigarette lighter power adaptor
* A/C power adaptor

7" CAMERA KITS

PART# DMAC-H7C1 $1,164.00 Y
PART# DMAC-H7C2 $1,796.00 Y

9" CAMERA KITS

PART# DMAC-H9C1 $1,317.00 Y
PART# DMAC-H9C2 $1,950.00 Y

BOBCAT CAMERA KIT

* True HD Resolution (720P)
* 16:9 aspect ratio so image doesn't need to be "stretched" to match monitors
* Improved color & clarity over standard analong video cameras
* Increased ability to interpret shadowed areas, allowing for a large viewing area
* Built-in, high-quality CCD camera with high-performance lighting
* Auto on IR Lighting
* Standard camera lens features a 170* wide angle horizontal field of view
* Kit includes 7" monitor w/bracket, 10' power video

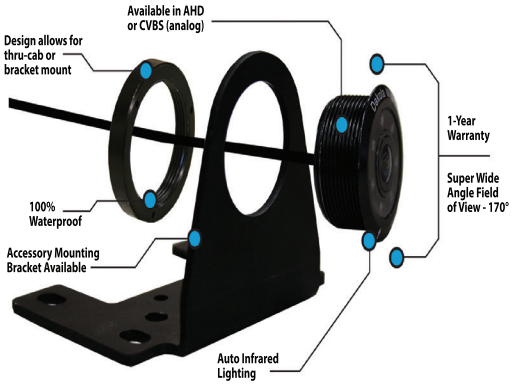

PART# DMRZ-SH7C1 $964.00 Y

(866)775-8089
FAX (701)775-8217

SINGLE & DOUBLE CAMERA KITS

As Dakota Micro's entry level camera system, OverView offers quality construction, versatility, and an impressive list of features with an affordable price tag.

* 2.9mm OverView Camera - 1 Single, 2 Double
* 7" OverView LED Backlit Monitor - Stand & Remote
* 20' of power/video cable for each camera
* 12v cigarette lighter power adaptor

7" CAMERA KITS

PART# DMOV-7M-C1 $457.00 Y
PART# DMOV-7M-C2 $649.00 Y

OVERVIEW
ALL IN ONE DIGITAL WIRELESS KIT

PART# DMOV-DW7MC2 $667.00 Y

INCLUDES:

* OverView 7in DIGITAL Wireless Monitor
* 2 - OverView Digital Wireless Cameras
* 12V Cigarette Lighter Power Adaptor
* 2 - 12V Hardwire Power Adaptor
* 3 - 5dBi Wireless Antennas

FEATURES:

* BUILT IN *DIGITAL* WIRELESS ELIMINATES THE NEED FOR EXTRA COMPONENTS
* UP TO 1/4 MILE RANGE WITH LINE OF SIGHT
* VIEW CAMERAS ONE AT A TIME OR SIDE BY SIDE
* CAPABLE OF DISPLAYING 2 DIGITAL WIRELESS CAMERAS
* BUILT IN INFARED NIGHT VISION ALLOWS FOR VIEWING UP TO 45+ FEET
* NOT INTERCHANGEABLE WITH DAKOTA MICRO ANALOG WIRELESS PRODUCTS

5” Monitor Complete Kit

VWIC500-L $199.00 Y

5” Digital LCD monitor
with suction cup mount.
License plate cam and 30’ cable.
Great for backing up to
trailers with your pick-up truck.

7” Monitor Complete Kit

VWIC700 $329.00 Y

7” LCD Monitor.
Durable camera w/magnet
Larger screen and two camera inputs

10” Monitor Complete Kit

VWIC104V2 $729.00 Y

2 Cameras w/magnets
10” LCD Quad Monitor
700 TVL Resolution
IP 68 Durability Rating

VWIC104V4 $969.00 Y

4 Cameras w/magnets
10” LCD Quad Monitor
700 TVL Resolution
IP 68 Durability Rating

ALSO AVAILABLE WIRELESS

ATV SPRAYERS

ATV Kit

FEATURES:
Adjustable Boom
TeeJet & Banjo Plumbing Parts
5.3GPM Remco 12V Pump
Inline TeeJet Strainer to Protect Pump
Spray Wand & 20' Hose
Glycerin Filled Gauge & Pressure Regulator
Drain Valve
20 Gallon Tank w/Sump
12' Boom

Part # ATVKIT-20/160 $1,299.00 Y

ATV Mini-Sprayer

FEATURES:
Commercial Quality
50 Gallon Low Profile Tru-Kleen Tank
16.5 x 6.5 x 8 High Flotation Turf Tires
Tank has molded Anti-Vortex Baffles
All Terrain Design
Hose Reel, 50' Hose
Spray Wand
12' Boom
4HP Honda w/22 GPM Centrifugal Pump

Part # ATVMINI $3,504.90 Y

ATV Maxi-Sprayer

FEATURES:
110 or 150 Gallon Tank
20' or 30' Booms
Walking Tandem Axles
Axles Adjust for Row Spacing (60" - 80")
Pull by a Small Utility Tractor or UTV
4HP Honda w/22.5GPM Centrifugal Pump
Auto Boom Breakaway
Adjustable Boom Height
High Flotation Tires (20 x 20 x 8)
Hose Reel & Spray Wand for Spot Spraying
Optional - Electric Control

Part # ATVMAX-20 $6,167.70 Y
Part # ATVMAX-30 $6,560.40 Y

DELUXE BROADCAST SPRAYER

UTV Deluxe Broadcast Sprayer
50 Gallon

* 3.0 GPM EVERFLO Pump
* Deluxe Adjustable Spray Gun
* 15’ Rubber Hose to Spray Gun
* Chemical Resistant polyethylene Tank
* All Steel Frame and Boom
* 10’ Coverage
* 3 Section 6 Nozzle Folding Boom
* 12V Connection Cables Included

Part# UTV50-620 $890.00 Y

(866)775-8089
FAX (701)775-8217

ATV, LAWN & TRAILER SPRAYERS

ATV Sprayer
25 Gallon

* 7' Boom Standard
* Chemical Resistant polyethylene Tank
* 5" Fill Lid w/Tether
* Variable Pressure Regulator
* Adjustable Brackets for Perfect Boom Height
* 12V Connection Cables
* 18" lever Handgun w/15ft hose
* Adjustable Cone Spray Nozzle
* Ideal for applying Insecticides & Herbicides
* Round-up Ready
*10' Boom Available

Part# ATV25 $340.00 Y
Part# ATV25-420 $385.00 Y

Lawn Sprayer
40 & 60 Gallon

* Chemical Resistant polyethylene Tank
* On-Off Boom Control
* 3 section folding break away boom
* 10' Boom Spray 40 Gal
* 12' Boom Spray 60 Gal
* Deluxe Handgun
* Adjustable Cone Spray Nozzle
* Ideal for applying Insecticides & Herbicides
* Round-up Ready

Part# LS40-620 $815.00 Y
Part# LS60-820 $1,050.00 Y

Trailer Sprayer
15 & 25 Gallon

* Chemical Resistant polyethylene Tank
* 5" Fill Lid w/Tether
* Steel powder coated frame w/10" pneumatic tires
* 80" Boom Spray Coverage
* 12V Connection Cables with switch
* 18" lever Handgun w/15ft hose
* Adjustable Cone Spray Nozzle
* Ideal for applying Insecticides & Herbicides
* Round-up Ready

Part# LS25ND $430.00 Y

FIELD BOSS/BOOMS

BOSS 365

SFB060FG225GH $3,320.00 Y
SFB100FG225GH $3,460.00 Y

New design 100% drain-able tank
Easily clean your tank to avoid mixing chemical when spraying.

Easily load and unload your sprayer
Each Field Boss comes with integrated fork points forl loading and unloading.

Control your boom from your seat
The spring loaded control arm allows you to manage your boom options.

XSTREAM

SFB060FG290EX $3,910.00 Y
SFB100FG290EX $4,055.00 Y

New automatic shut-off filter
You can now clean the filter at any time without having to empty the tank.

Low profile tank for extra stability
Keep your liquid close to the ground to keep your center of gravity low.

Heavy duty 100% poly hose reel
Easy to wind, this hose reel is constructed to withstand many years of rugged use.

ECOLITE

SFB060FG712V $2,755.00 Y
SFB100FG712V $2,950.00 Y

Control your pump from your seat
Switch your pump off when it is not in use to reduce wearing.

Attach any Enduraplas boom in minutes
You have boom spraying in mind, we have a quick and easy solution.

12 volt pump performance
If you're looking for a quiet, efficient pump option, this is your answer.

attach any enduraplas boom in minutes

POLY BOOM
13 Feet
ASBP13GY $770.00 Y

STEEL BOOM
12, 20, 26 & 30 Feet
ASBS12SS $585.00 Y
ASBS20SS $1,095.00 Y
ASBS26XKIT $275.00 Y
ASBS30XKIT $355.00 Y

BOOMLESS
24 & 30 Feet
ASBB24 $195.00 Y
ASBB30 $390.00 Y

RECEIVER HITCH
AZFRH001 $423.00 Y

(866)775-8089
FAX (701)775-8217

PICKUP/UTV SPRAYERS

PRO MASTER 725

FEATURES:
200, 250, 300 & 400 Gallon
sump bottom tank for easy drainage
high pressure honda pump
adjustable spraying pattern

SPM200FG725	**$9,260.00 Y**
SPM250FG725	**$9,335.00 Y**
SPM300FG725	**$9,570.00 Y**
SPM400FG725	**$9,650.00 Y**

PRO MASTER 580E

FEATURES:
100, 200, 250, 300 & 400 Gallon
space saving compact design
complete with 100' of high pressure hose
manual pressure regulator & gauge

SPM100FG580E	**$8,970.00 Y**
SPM200FG580E	**$9,725.00 Y**
SPM250FG580E	**$9,570.00 Y**
SPM300FG580E	**$9,960.00 Y**
SPM400FG580E	**$10,115.00 Y**

FIRE BOSS

FEATURES:
60 & 100 Gallon
easy wind hose reel
compact space saving design
Honda engine

SMFB060FG120GH	**$4,475.00 Y**
SMFB100FG120GH	**$4,550.00 Y**

FIRE RANGER

FEATURES:
250, 300 & 400 Gallon
integrated quick fill system
high flow fire nozzle
slide into the back of your pickup

SMF250FG120GH	**$5,615.00 Y**
SMF300FG120GH	**$6,070.00 Y**
SMF400FG120GH	**$6,220.00 Y**

FOAM BOSS

FEATURES:
60 & 100 Gallon
frame includes integrated fork points
use foam to suppress fire/using less water
built in foam gauge to change amount of foam

SMFFB060FG120GH	**$5,355.00 Y**
SMFFB100FG120GH	**$5,515.00 Y**

FOAM RANGER

FEATURES:
250, 300 & 400 Gallon
foam for creating long lasting fire breaks
special air induction nozzle
a built in foam tank and foam gauge

SMFF250FG120GH	**$7,440.00 Y**
SMFF300FG120GH	**$7,725.00 Y**
SMFF400FG120GH	**$8,170.00 Y**

Other pull-type trailer sprayers available.
Marshal Trailers & 12 Volt Trailers also available.

NURSE TRAILERS

PIN MOUNTED NURSE TRAILER

STANDARD BENEFITS:

*Long lasting powder coat finish on steel
*Thick tank sidewalls provide superior strength
*Pin-mounted tank system eliminates wear point on tank
*Heavy Duty 2” x 6” tube steel frame on 800 & 1000 gallon trailers
*Heavy Duty 2” x 8” tube steel frame on 1600 gallon trailers

CONE BOTTOM NURSE TRAILER

STANDARD BENEFITS:

*15 degree cone-bottom for total evacuation
*Heavy Duty 2” x 6” tubular steel frame
*Long-lasting powder coat finish on steel
*Ribbed sidewall tank for extra strength
*Green color deters algae growth
*Slipper-spring suspension using leaf springs for smoother ride

TRAILER SHOWN INCLUDES:
4’ EXTENDED WOODEN DECK,
MIXING CONE KIT,
PUMP KIT & PUMP COVER

CALL FOR PRICING

(866)775-8089
FAX (701)775-8217

TRANSPORTABLE STORAGE TRAILERS

A perfect portable storage solution for someone that requires liquid in different spots at different times.
With new design features, these cone trailers offer a range of user-friendly benefits.
Available in double and triple cone tanks.

* Industry leading Ribbed Wall tank warranty.
  You can depend on each Ribbed Wall tank to work as hard as you do.

* Unique jacking system.
  Ergonomic jack height with center pull hydraulic ram.

* Heavy duty power coated frame.
  Extra strong tube frame with built-in hose storage brackets.

* A complete drainage system.
  Pump position allows you to fully drain all hoses.

CALL FOR PRICING

FREESTANDING TRANSPORT TANKS

LIFTING-LUGS
Built-in and engineered to take the *weight of the tank, these make lifting the tank on and off the trailer a breeze.

THICK-WALL DESIGN
Extra-thick walls provide unmatched strength and durability.

PIN-MOUNT SYSTEM
The molded-in mounting lugs combined with heavy-duty steel pins will keep this tank fixed without movement. No hoops. No bands. No maintenance.

These freestanding Transport Tanks feature horizontal legs and are widely considered the most secure transport tank in the market. With the Pin-Mount advantage, these tanks are secured with double the number of fasteners than other tanks for similar use.

Available in sizes:
110 gallon to 4,500 gallon.

4 colors to choose from
Green & Black are standard
Yellow & White are special order.

ANTI-SPLASH STAINLESS LID
Lockable and spill-proof, this lid keeps liquid in while traveling on rough terrain. (Only on tanks 1,600 gallons and larger).

SINGLE-PIECE CONSTRUCTION
Rotationally-molded in a single mold means the tank is seamless, water-tight and leak-proof.

AUTO-DRAIN SUMP BASE
The sloped tank base channels every ounce of liquid to the drain. Just where it should go.

CALL FOR PRICING

POLY TANKS
FLAT BOTTOM, CONE BOTTOM

Enduraplas **Flat Bottom Storage** tanks use high-quality polyethylene and are built to store liquids like water, liquid fertilizer, waste vegetable oil, agricultural chemicals, liquid feed, industrial chemicals and more. These tanks are designed for indoor and outdoor applications and are easy and cost-effective to install.

FLAT BOTTOM STORAGE				
PART#	GALLONS	CAPACITY	H x D	PRICE
THV1000	1,000	1,000	65 x 80	1,530.00 Y
THV1550	1,550	1,700	80 x 85	1,865.00 Y
THV1650	1,650	1,731	75 x 90	2,024.00 Y
THV1750	1,750	2,009	92 x 85	2,155.00 Y
THV2000	2,000	2,276	93 x 90	2,630.00 Y
THV2100	2,100	2,208	100 x 85	2,630.00 Y
THV2500	2,500	2,680	113 x 90	3,005.00 Y
THV3000	3,000	3,126	125 x 90	3,680.00 Y
THV05000	5,000	5,500	150 x 110	7,595.00 Y
THV6000	6,000	6,500	179 x 110	10,490.00 Y
THV7011	7,011	7,011	126 x 144	10,800.00 Y
THV08000	8,000	8,150	142 x 144	13,980.00 Y
THV10000	10,000	10,400	178 x 144	16,795.00 Y

FEATURES:

UV STABILIZED POLYETHLENE
STRONG LID STRUCTURE/VENTED
SUITABLE FOR LIQUID FERTILIZER
4 POSITIVE TIE DOWN POINTS
MOLDED IN CALIBRATION
2" STANDARD FITTING (1000 - 2500)
3" STANDARD FITTING (3000 - 10000)

TANK COLORS:
GREEN & BLACK STANDARD
YELLOW & WHITE UPON REQUEST

Enduraplas **Cone Bottom Storage** tanks range in capacity from 550 to 10,000 gallons. They feature heavy-duty plastic construction, durable steel frame, four positive tie down points and a 15-degree conical bottom that can be emptied quickly. We also offer trailer configurations for portable cone-bottom tank storage.

CONE BOTTOM W/STAND				
PART#	GALLONS	CAPACITY	H x D	PRICE
THC01550K	1,550	1,550	95 x 85	4,420.00 Y
THC02500K	2,500	2,680	130 x 90	6,495.00 Y
THC03000K	3,000	3,126	146 x 90	7,170.00 Y
THC05000K	5,000	5,500	89 x 85	12,425.00 Y
THC10000K	10,000	10,400	93 x 90	26,485.00 Y

PRICING ON ALL POLY TANKS ARE SUBJECT TO CHANGE, PLEASE CALL FOR CURRENT PRICING AND AVAILABILITY

POLY TANKS
FREESTANDING, LEG

Enduraplas **Freestanding Transport** tanks are widely considered the most secure transport tank in the market. With the Pin Mount advantage, these tanks are secured with double the number of fasteners than other tanks for similar use.

FREESTANDING				
PART#	GALLONS	CAPACITY	L x W x H	PRICE
THF01600	1600	1600	130 x 71 x 59	4,655.00 **Y**
THF02200	2200	2200	130 x 71 x 72	6,645.00 **Y**
THF02500	2500	2500	130 x 87 x 75	8,375.00 **Y**
THF03200	3200	3200	145 x 97 x 79	9,515.00 **Y**
THF04500	4500	4500	179 x 95 x 84	15,015.00 **Y**

LEG			
PART#	GALLON	D x L	PRICE
LT-15S	15	14x30	127.69 **A**
LT-25S	25	16x34	134.64 **A**
LT-65W	65	24x39	286.01 **A**
LT-70W	70**	24x39	329.47 **A**
LT-125W	125	32x44	466.97 **A**
LT-165W	165	32x54	577.05 **A**
LT-225W	225	38x52	666.26 **A**
LT-335W	335	44x56	811.35 **A**
LT-535W	535	48x78	1,301.67 **A**

S = SUMP W = WITHOUT SUMP

PRICING ON ALL POLY TANKS ARE SUBJECT TO CHANGE, PLEASE CALL FOR CURRENT PRICING AND AVAILABILITY

POLY TANKS
ELLIPTICAL, HORIZONTAL, VERTICAL & PICK-UP

ELLIPTICAL			
PART#	GALLONS	WxLxH	PRICE
ET-200	200	41x66x26	647.71 **A**
ET-300	300	48x70x30	819.41 **A**
ET-400	400	57x70x36	910.29 **A**
ET-500	500	57x82x36	1,130.46 **A**
ET-750	750	69x89x42	1,532.30 **A**
ET-850	850	69x89x46	1,738.10 **A**
ET-1000	1000	78x90x49	1,954.09 **A**

CRADLES FOR ET		
PART#	BANDS	PRICE
CET-200	3” x 61”	568.23 **A**
CET-300	3” x 74”	648.97 **A**
CET-400	4” x 88”	757.97 **A**
CET-500	4” x 88”	875.54 **A**
CET-750	4” x 91”	1,420.48 **A**
CET-850	4” x 99”	1,428.63 **A**
CET-1000	4” x 105”	1,940.87 **A**

HORIZONTAL			
PART#	GALLONS	D x L	PRICE
HT-25	25	23x22	144.95 **A**
HT-55	55	23x38	215.66 **A**
HT-95	95	24x56	347.99 **A**
HT-110	110	30x44	353.98 **A**
HT-15032	150	32x52	435.26 **A**
HT-20032	200	32x68	517.46 **A**
HT-20038	200	38x51	517.46 **A**
HT-300	300	38x76	663.05 **A**
HT-500	500	48x79	901.79 **A**

CRADLES FOR HT		
PART#	BANDS	PRICE
CHT-25	1.5” x 50”	112.01 **A**
CHT-55	2” x 50.5”	122.56 **A**
CHT-95	2” x 51.5”	216.33 **A**
CHT-110	2.75” x 60”	245.66 **A**
CHT-150	2.75” x 56”	342.87 **A**
CHT-20032	2.75” x 57”	498.72 **A**
CHT-20038	2.75” x 65”	474.80 **A**
CHT-300	2.75” x 69.5”	573.42 **A**
CHT-500	2.75” x 86.5”	698.65 **A**

Ace Roto-Mold
A DIVISION OF DEN HARTOG INDUSTRIES, INC.

VERTICAL			
PART#	GALLONS	D x H	PRICE
VT-65	65	23x42	229.29 **A**
VT-100	100	28x45	330.95 **A**
VT-110	110	32x41	344.69 **A**
VT-175	175	31x61	425.68 **A**
VT-225	225	31x76	566.84 **A**
VT-265	265	31x88	620.97 **A**
VT-300	300	42x55	606.75 **A**
VT-425	425	42x75	781.62 **A**
VT-550	550	52x66	887.31 **A**

PICK-UP TANKS			
PART#	GALLON	W x H	PRICE
PUT-200	200	52x30	426.11 **A**
PUT-305	305 LP	60 x 58 x 30	709.66 **A**
PUT-350	350	62x34	649.39 **A**
PUT-450	450	62 x 41	756.66 **A**

TANK CLEANER & NEUTRALIZER		
PART#	DESCRIPTION	PRICE
ALLCLEAR	DECONTAMINATOR GAL	34.75 **NET**
CUTRINE	ALGAECIDE GAL	17.50 **Y**

PRICING ON ALL POLY TANKS ARE SUBJECT TO CHANGE, PLEASE CALL FOR CURRENT PRICING AND AVAILABILITY

INDUCTORS & RINSE TANK

"KIT INCLUDES - 2" FITTINGS"
1-Close Nipple, 2 Hose Barbs,
1-Threaded Tee & Valve

INDUCTORS		
PART#	**DESCRIPTION**	**PRICE**
ACE ROTO-MOLD TANKS		
ATK-15	15 GAL TANK (1-1/2")	143.29 **A**
ATKS-15	15 GAL STAND	124.97 **A**
ATK15KIT	15 GAL KIT	365.00 **A**
ATK-30	30 GAL TANK (1-1/2")	185.15 **A**
ATKS-30/55	30 GAL STAND	132.60 **A**
ATK30KIT	30 GAL KIT	413.00 **A**
ATK-40	40 GAL TANK (2")	261.47 **A**
ATKS-40/85	40 GAL STAND	230.78 **A**
ATKTS-40/85	40 GAL TALL STAND	247.62 **A**
ATK40KIT	40 GAL KIT	575.00 **A**
ATK-55	55 GAL TANK (1-1/2")	341.40 **A**
ATKS-30/55	55 GAL STAND	132.60 **A**
ATK55KIT	55 GAL KIT	564.00 **A**
ATK-60MAG	60 GAL MAG TANK (2")	285.39 **A**
ATKS-40/85	60 GAL MAG STAND	230.78 **A**
ATKTS-40/85	60 GAL TALL MAG STAND	247.62 **A**
ATK60MAGKIT	60 GAL MAG KIT	600.00 **A**
ATK-85	85 GAL TANK (2")	341.40 **A**
ATKS-40/85	85 GAL STAND	230.78 **A**
ATKTS-40/85	85 GAL TALL STAND	247.62 **A**
ATK85KIT	85 GAL KIT	660.00 **A**
ATK-110	110 GAL TANK (2")	402.09 **A**
ATKS-110	110 GAL STAND	230.78 **A**
ATK110KIT	110 GAL KIT	720.00 **A**
TRU-KLEEN TANKS		
TK20TS-2	20 GAL TANK & STAND	269.00 **A**
TK20TS-3	20 GAL TANK/TALL STAND	269.00 **A**
TK30TS-2	30 GAL TANK & STAND	294.00 **A**
TK30TS-3	30 GAL TANK/TALL STAND	294.00 **A**
TK40MTS-2	40 GAL MAG TANK/STAND	352.00 **A**
TK40MTS-3	40 GAL MAG TANK/TALLSTAND	352.00 **A**
TK60MTS-2	60 GAL MAG TANK/STAND	398.00 **A**
TK60MTS-3	60 GAL MAG TANK/TALL STAND	398.00 **A**
TK100MTS	100 GAL MAG TANK/TALL STAND	690.00 **A**
TK200MTS	200 GAL MAG TANK/TALL STAND	942.00 **A**

FULL DRAIN INDUCTOR TANKS NO BULKHEAD FITTING MEANS COMPLETE TANK DRAINAGE.

RINSE TANK

RT-9-KIT (SHOWN)

RINSE TANKS		
PART#	**DESCRIPTION**	PRICE
RT-2.5	2.5 Gal Rinse Tank	51.40 **A**
RT-3	3 Gal Rinse Tank	53.52 **A**
RT-4	4 Gal Rinse Tank	79.58 **A**
RT-5	5 Gal Rinse Tank	79.58 **A**
RT-9-KIT	9 Gal Tank/Valve/Compartment	145.60 **P**
RT-10	10 Gal Rinse Tank	137.88 **A**
RT-20	20 Gal Rinse Tank	141.37 **A**
RT-35	35 Gal Rinse Tank	178.37 **A**
RT-56	56 Gal Rinse Tank	246.07 **A**

PRICING ON ALL POLY TANKS ARE SUBJECT TO CHANGE, PLEASE CALL FOR CURRENT PRICING AND AVAILABILITY

TANK ACCESSORIES

POLY TANK LIDS		
PART#	**DESCRIPTION**	**PRICE**
60002	8” w/AIR VENT	25.02 **D**
60003	8” RING ONLY	11.42 **D**
60019	4” w/AIR VENT (AIR VENT FOR 16” LID)	18.93 **D**
60032	8” w/RING & AIR VENT	35.03 **D**
60038	16” w/RING & AIR VENT	53.53 **D**
60322	5” w/BALL CHECK AIR VENT (Prior 2/1/00)	18.93 **D**
60367	16” VENTLESS w/RING	55.63 **D**
61727	AIR VENT FOR 8” ONLY (snap on)	8.49 **D**
62531	LANYARD	1.89 **D**
62532	16” HINGED w/RING & AIR VENT	164.89 **D**

POLY BULKHEAD FITTINGS			
PART#	**DESCRIPTION**	**HOLE SIZE**	**PRICE**
BHF12	1/2” BULKHEAD	1-5/8”	12.75 **D**
BHF34	3/4” BULKHEAD	1-5/8”	12.75 **D**
BHF100	1” BULKHEAD	2-1/4”	15.18 **D**
BHF114	1-1/4” BULKHEAD	2-1/4”	17.70 **D**
BHF112	1-1/2” BULKHEAD	3”	26.33 **D**
BHF200	2” BULKHEAD	3”	26.33 **D**
BHF220	2” FP BULKHEAD	3-1/4”	34.80 **D**
BHF300	3” BULKHEAD	4-1/2”	58.28 **D**
MTF220BD	2” MANIFOLD FLANGE	3-1/4”	38.30 **D**
MTF300BD	3” MANIFOLD FLANGE	4-1/4”	65.33 **D**
62834	1/2” HD DOUBLE THREAD BULKHEAD	1-7/16”	9.67 **D**
60401	3/4” DOUBLE THREAD BULKHEAD	1-7/16”	7.57 **D**
62798	3/4” HD DOUBLE THREAD BULKHEAD	1-5/8”	10.05 **D**
60427	1” DOUBLE THREAD BULKHEAD	2-1/4”	9.67 **D**
60403	1-1/4” DOUBLE THREAD BULKHEAD	2-1/4”	9.48 **D**
63065	1-1/4” ANIT-VORTEX BULKHEAD	2-1/4”	12.10 **D**
60124	1-1/2” DOUBLE THREAD BULKHEAD	3”	14.51 **D**
60405	2” DOUBLE THREAD BULKHEAD	3”	13.81 **D**

POLY SIPHON TUBES		
PART#	**DESCRIPTION**	**PRICE**
BHST200	2” SIPHON TUBE	27.63 **D**
BHST300	3” SIPHON TUBE	40.85 **D**

TANK ACCESSORIES

VORTEX CAP			
PART#	DESCRIPTION	HOLE SIZE	PRICE
VC230	2” ANTI VORTEX W/12 MESH SCREEN	2”	24.78 **D**
VC330	3” ANTI VORTEX W/10 MESH SCREEN	3”	41.93 **D**
TF100AV	1” ANTI VORTEX TANK FLANGES	2-1/4”	33.33 **D**
TF125AV	1-1/4” ANTI VORTEX TANK FLANGES	2-1/4”	33.33 **D**
TF150AV	1-1/2” ANTI VORTEX TANK FLANGES	3”	41.68 **D**
TF200AV	2” ANTI VORTEX TANK FLANGES	3”	41.68 **D**

BUTRESS X MALE ADAPTER		
PART#	DESCRIPTION	PRICE
TA283	2”Buttress x 2” Male NPT w/Santoprene Gasket	27.08 **D**
TA283QD	2” Buttress x 2” Male Adapter QDC w/Santoprene Gasket	21.08 **D**

POLY SWIVEL		
PART#	DESCRIPTION	PRICE
BSW100	1” SWIVEL	19.25 **D**
BSW150	1-1/2” SWIVEL	23.58 **D**
BSW200	2” SWIVEL	26.43 **D**
BSW220	2” FP SWIVEL	43.98 **D**

POLY DRUM FAUCET		
PART#	DESCRIPTION	PRICE
D1050	3/4” FAUCET	6.05 **R**
D1050-2	2” FAUCET	40.95 **R**

WATER CONTROL VALVES		
PART#	DESCRIPTION	PRICE
HVFLOAT	1” WATER LEVEL VALVE 8-140 PSI 1” FPT	45.50 **A**
P09	HV REPLACEMENT SCREEN	4.50 **NET**
K4	HV REPAIR KIT	17.95 **NET**
RJV20-HF-LP	3/4” FLOW ROJO FLOAT VALVE	82.00 **A**

POLY MANIFOLD		
PART#	DESCRIPTION	PRICE
TM075/050	8 Station Manifold 3/4” Inlet x 1/2” Outlet, Gauge Port	47.20 **D**

TANK REPAIR		
PART#	DESCRIPTION	PRICE
60221	POLY WELDING GUN & ROD	449.14 **D**
61879	POLY WELDING ROD - 30’	94.79 **D**

RECIRCULATING BATCH MASTER & CHEMICAL INOCULATOR

*Ideal for mixing DRY chemical
- 3 point recirculating tank
- 2” or 3” plumbing options

Pump sold separately

*20 Gallon Tank
*Adjustable Magnetic Nozzle Mount
*Manual Rate Adjustment

PART#	GALLONS
BatchMaster65	65
BatchMaster100	100
BatchMaster200	200

PART#	DESCRIPTION	PRICE
TKI-12V	20 GAL INOCULATOR 12V	865.20 **A**
TKI-115V	20 GAL INOCULATOR 115V	959.70 **A**

CALL FOR PRICING

INDUCTOR ACCESSORIES

1. **Cone Rinse** - washes chemical out of ENTIRE tank
2. **Anti-Vortex Plate** - eliminates swirl in tank
3. **Jug Rinse** - leaves no wasted chemical in chemical tank
4. **Tank Agitation** - evenly mixes chemical
5. **Jug Cutter** - stainless steel blade used to open, empty and rinse chemical container (16” lid required)
6. **Rinse Valves** - Top (a) - Cone Rinse, Bottom (b) - Jug Rinse

SAFEGUARD HAS YOUR BACK

Applying liquid fertilizer used to be a pain in the neck. Not anymore. You no longer have to watch your back for application blockages.

With SafeGuard's in-cab audible alarm and visual display, you'll instantly hear and see what you've been missing. SafeGuard's around-the-clock protection continuously monitors your application. SafeGuard instantly informs you of liquid blockages and pinpoints their location, arming you with the knowledge and power to fix them immediately to stop yield reduction and profit loss dead in their tracks. Take back control of your application and put more dollars in your pocket.

CALL FOR PRICING

MICRO-TRAK MONITORS

SHAFT-TRAK

Monitors up to 6 independent shafts simultaneously, or up to 6 lin level sensors or a combination of up to 3 shaft and 3 bin levels.

FEATURES:

- ***The simplest of all monitors - simply install sensors and turn on power settings or calibration are required**
- ***Immediate notification when shaft RPM drops below 45 or level in the bin drops below the bin level sensor**
- ***Standard with Hall-effect (non-mechanical) magnetic shaft speed sensor**
- ***Visual and audible alarms**
- ***Eliminate unseeded areas**
- ***Save money and time by seeding once**
- ***Avoid embarrassing and costly skips**

PART#	# SHAFTS	PRICE
01323	0	703.00 **A**
01330	1	783.00 **A**
01331	2	898.00 **A**
01332	3	946.00 **A**
01333	4	1,023.00 **A**
01334	5	1,105.00 **A**
01335	6	1,181.00 **A**

DUAL ISOMOD - RATE CONTROLLER FOR ISOBUS

Flexible, powerful, automatic rate controller - features Single of Dual channel control and multi-section capabilities. It is ISOBUS ready, connecting easily to existing control systems and utilizing an in-cab ISO terminal for setup and control.

- *** Advanced rate control combined with flexible channel configuration options - choose from Normal, Parallel and Injection modes.**
- *** Powerful Multifunction outputs to control on/off valve for Master, Relief, Flow Trigger or Flush functions.**

Designed from the ground up to meet the unique needs of today's precision farmers.

Part# 01845 $2,473.00 A
Dual ISOmod kit - Single Product Rate Control
(Includes: module, power cable & channel 1 cable)

Part# 01993 $2,749.00 A
Dual ISOmod kit - Dual Product Rate Control
(Includes: module, power cable & Channel 1 & 2 cables)

PART#	ISOmod Kit Parts	PRICE
19667A	Dual ISOmod Module	2,128.00 **A**
19604A	Dual ISOmod Bulkhead Harness 2'	701.25 **A**
19605A	Dual ISOmod Channel 1 Branch Cable 10'	328.80 **A**
19606A	Dual ISOmod Channel 2 Branch Cable 10'	329.00 **A**
19669	Dual ISOmod 6-section Branch Cable 10'	331.00 **A**
19670	Dual ISOmod 12-section Branch Cable 10'	600.00 **A**

AUTOMATIC RATE CONTROLLERS

SPRAYMATE II

PART# 01340 $2,255.00 A

SPRAYMATE Plus

PART# 01352 $2,751.00 A

FEATURES :
*All-in-one design with built-in controls for up to 3 separate boom sections
*Master control switch standard
*Standard On/Off power switch
*Flash memory for simple customizing
*Bulit-in capability for future VRA
*Added NH3 and Turf units
*Records area and volume in 3 independent pairs of counters so individual jobs may be tracked
*Tank counter shows amount remaining in tank
*Enhanced reliability, precision and accuracy
*Inline/bypass for servos
*Troubleshooting enhancements including "No Speed" and "No Flow" messages
*On-the-go rate adjustment
*Push-button auto/manual feature for spot treatments
*Minimum flow feature to ensure proper application pattern as ground speed slows to extremes
*Precise rate control regardless of field condition
*Solenoid and ball valve compatible
*Flow-based control
*Controls electric and hydraulic valves/motors
*NH3 compatible

CALC-AN-ACRE II

FEATURES:
*Accurate Speed, Area and Distance Measurement
*Includes Hall-effect speed sensor, mounting hardware and weatherproof connections
*Wide range of use - sprayers, tractors, ATV's, trucks, floaters, etc.
*Provides improved chemical efficiency and accuracy
*Area Per Hour & Accumulated Hour functions to track progress, plan work, and schedule maintenance
*Width Reduction function to measure the effective area of active boom sections
*Provides shaft RPM readout (with optional Shaft Sensor Kit)
*Push-button run/hold
*Distance measurement
*3 independent area counters
*Displays true ground speed to 1/10 mph

PART# 01000 $615.00 A

Plus SERIES
AUTOMATIC RATE CONTROLLERS

RATEKING Plus

PART# 01878 $1,883.00 A

RATEKING DUAL Plus

PART# 01899 $3,213.00 A

New and Expanded Features

* Flow or Pressure Based Control
* Pressure Monitoring
* PWM or Servo Control to accommodate different PWM devices
* Adjustable PWM Minimum and Maximum Pulse Width to prevent motor stalling or over pressure
* Multifunction Output can be set to Control an On/Off Valve for Master, Relief, Flow Trigger or flush functions
* Closed or Open Loop Control offer the option of running without a flowmeter
* Custom Data Position offers the ability to monitor VRA activity or live PWM activity
* Calibration Lockout prevents inadvertent Calibration changes
* Selectable Control Valve Polarity
* Selectable Section Valve Polarity
* Rate Error LED
* Selectable Rate Alarm Percentage
* Selected Hold State
* Dedicated Increase/Decrease Rate Buttons
* Three-Way Section Valve Control
* Selectable Start & Speed Time

AUTOMATIC NH3 RATE CONTROLLERS

Designed specifically to control anhydrous ammonia.

MT-NH3 II

FEATURES:

***Built-in capability for future VRA**
***Records area and volume in 3 independent pairs of counters so individual jobs may be tracked**
***Enhanced reliability, precision and accuracy**
***Troubleshooting enhancements including "No Speed" and "No Flow" messages**
***Provides a complete picture of critical application functions and an accurate record of work performed**
***Includes console/main valve ON/OFF switch with safety lock**
***Application Rate Actual "N" - Displays the amount of actual "N" applied per unit area**
***Flow Rate - Displays the amount of NH3 applied per minute**
***Total NH3 - Records the total amount of NH3 applied (3 counters)**
***Area Per Hour - Tracks work progress**
***Ground Speed**

PART# 01144 $1,534.00 A

DirectConnect KITS

Micro-Trak's Liquid and NH3 Kits are now
COMPLETLY compatible with all Major controllers in the industry.

---Easily connect your Micro-Trak system to---

*** Topcon**	*** John Deere**
*** Trimble**	*** Raven**
*** AgLeader**	*** Case**

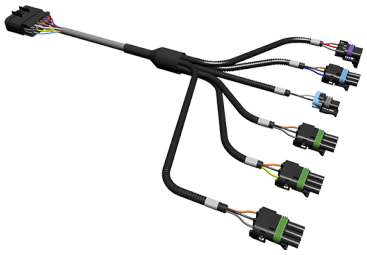

Micro-Trak is constantly growing our compatibiltiy list.
If you do not see your brand, simply give us a call for the latest list available.

MICRO-TRAK SYSTEMS, INC.

LIQUIFIER MAX
PART# 01818

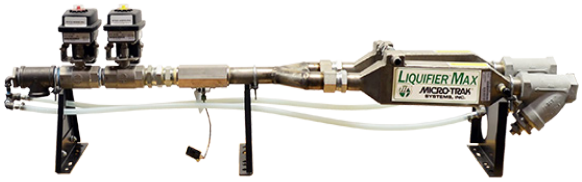

Specifications:
*70 GPM @ 100 psi Tank Pressure
(21,000 lbs NH3/hr)
*40 GPM @ 40 psi Tank Pressure
(12,000 lbs NH3/hr)

Features:
*High capacity stainless steel heat exchanger rated up to 21,000 lbs NH3/hr
*Extended application window means superior performance even in extremely cold weather
*Increased capacity - Colder Temps - Larger Toolbars

LIQUIFIER
PART# 01817

Specification:
*40 GPM @ 100 psi Tank Pressure
(12,000 lbs NH3/hr)
*25 GPM @ 40 psi Tank Pressure
(7,500 lbs NH3/hr)

Feature:
*Stainless steel heat exchanger rated up to 12,000 lbs NH3/hr
*Straight-through design means superior performance even in extremely cold weather

CALL FOR PRICING

LIQUIFIER JUNIOR
PART# 01816

Specifications:
*23 GPM at 100 psi Tank Pressure
(6,000 lbs NH3/hr)
*15 GPM at 40 psi Tank Pressure
(3,750 lbs NH3/hr)

Features:
*Stainless steel heat exchanger rated up to 6,000 lbs NH3/hr
*Economically priced
*Compact design

NH3500 Low Rate Kit Available:
*Stainless steel heat exchange rated for 600 to 2800 lbs NH3/hr

LIQUIFIER ULTRA LOW RATE
PART# 01815

Specifications:
*11 GPM @ 100 psi Tank Pressure

Features:
*Stainless steel heat exchanger rated for 600 to 2800** lbs NH3/hr

**Delivery rates are dependent on tank pressure and plumbing

12-Volt Pump Flow Control

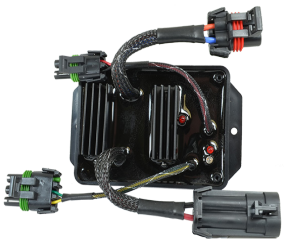

PART# 01757 $1,128.00 A
STANDARD
PART# 01758 $1,128.00 A
PWM

The Electric Motor Drive (EMD) enables all of our rate controllers, SpayMate II, MT-2405F II, SprayMate Plus, RateKing Plus, RateKing Dual Plus and RoadMaster, to control the rate of flow by regulating the speed of a 12 volt pump. It can also be integrated into most major-brand control systems.

Precise, accurate and effective control of application rate is accomplished with the EMD. It is ideal for controlling low-rate starter fertilizer and seed drills and planters.

The EMD replaces the electric servo valve and will control most 12v pumps with up to a max of 40 amps.

The system can be purchased as a part of a customized kit complete with control console, speed sensor and flowmeter, or if you presently own one of the controllers listed above, you can just add the EMD Kit and use your existing console and components.

Installation is easy; install on your planter sprayer set up or custom ATV.

Astro GPS Speed Sensors

PART# 01410 Astro II $529.00 A
PART# 01425 Astro 5 $707.00 A

Two models to choose from:
the economic Astro II or super-fast Astro 5

Great Price. Compact. Accurate. Durable.

* The Astro GPS Speed Sensors are a direct replacement for magnetic wheel speed sensors or radar guns and can interface to most brands of monitors and controllers.
* The magnetic mount bracket is standard and allows for quick installation and easy transfer from one vehicle to another. Optional vacuum mount kits available.
* Not affected by crop canopies or adverse ground conditions.
* Improve productivity and efficiency!

The Astro includes 2 red status lights on the interface module:

* **POWER:** turns on when power is applied to the unit.
* **VALID GPS:** blinks when the GPS receiver is working but has not yet acquired satellites.

MC-25 MANUAL CONTROLLER

PART# 01068 $619.00 A

Applications:
* Control motor speed on any 12-volt pump to vary output
* Provides accuracy over a wide range of RPM's
* Used for low volume starter fertilizer on drills and planters

Features:
* Manual Speed Control for 12-Volt Pumps
* Built-in circuit breaker
* Available with or without pressure gauge bracket
* Mounts in the tractor cab for easy access
* On/Off Control Switch with power indicator lamp
* 10' and 20' Motor Extension Cables Available

MICRO-TRAK SYSTEMS, INC.

At-plant Electric System Control

* Precision control, simplified plumbing and maximum range
* Reduce unexpected maintenance on your planters liquid system
* 2 products can be controlled with single controller
**All with the ease of electric pumps

Choose your controller

- single or dual product Plus Series Controller
- DUAL ISOmod Controller
- DirectConnect Interface to 3rd party control module

John Deere Case IH
Trimble AgLeader

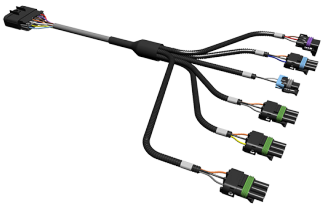

To Complete System

- single or dual pump kit
- PWM Electric Motor Driver
- Flowmeter

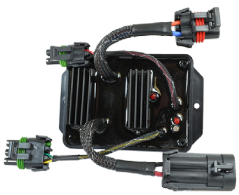

Simplify your liquid system while MAXIMIZING performance!
Call for pricing.

(866)775-8089
FAX (701)775-8217

CUSTOMIZED SYSTEMS

CHOOSE ONE FROM EACH CATEGORY TO CUSTOM BUILD A COMPLETE SYSTEM TO FIT YOUR APPLICATION

A. CONSOLE WITH MAIN HARNESS		
PART#	DESCRIPTION	PRICE
01341	SPRAYMATE II	1,076.00 A
01226	MT-2405F WITH UNIVERSAL HARNESS	850.00 A
01878	RATEKING Plus	1,883.00 A
01899	RATEKING DUAL Plus	3,213.00 A

B. GROUND SPEED SENSOR		
PART#	DESCRIPTION	PRICE
14214	RADAR ADAPTER FOR JOHN DEERE 7000, 8000 & 9000 SERIES	127.00 A
14215	RADAR INTERFACE DICKEY-JOHN AMP CONNECTOR	192.00 A
14217	RADAR INTERFACE DICKEY-JOHN DEUTCH CONNECTOR	192.00 A
14218	RADAR INTERFACE DICKEY-JOHN FORD CONNECTOR	192.00 A
14219	RADAR INTERFACE DICKEY-JOHN PACKARD CONNECTOR	192.00 A
14220	RADAR INTERFACE PHILIPS/MAGNAVOX	192.00 A
14221	RADAR INTERFACE RAVEN	192.00 A
01531	MAGNETIC SPEED SENSOR KIT	270.00 A

C. FLOWMETER KITS		
PART#	DESCRIPTION	PRICE
01500	FM500 POLY FLOWMETER KIT (1/2” FPT .5-5 GPM)	520.00 A
01501	FM750GFN NYLON FLOWMETER KIT (3/4” FPT 2-40 GPM)	520.00 A
01504	FM750SS STAINLESS FLOWMETER KIT (3/4” FPT 2-40 GPM)	936.00 A
01505	FM1000SS STAINLESS FLOWMETER KIT (1” FPT 3.5-70 GPM)	1,015.00 A
01515	FLOWMASTER 270 POLY FLOWMETER KIT (2” FLANGE 2-70 GPM)	852.00 A
01506	FM1500SS STAINLESS FLOWMETER KIT (1-1/2” FPT 10-130 GPM)	1,335.00 A

D. LIQUID FLOW CONTROL (SERVO) VALVE KIT		
PART#	DESCRIPTION	PRICE
19093	1” SERVO VALVE KIT 150 PSI	429.00 A
19096	1” FLANGED SERVO VALVE KIT	600.00 A

REPLACEMENT PARTS

MAIN HARNESSES

PART#	CABLE	USED WITH	PRICE
10415	Main Wiring Harness	MT-3000	504.30 **A**
14318	Power & Boom Harness	MT-3405 & 9000	514.37 **A**
14319	Console Boom Branch Harness	MT-3405 & 9000	282.01 **A**
14320	Flow, Servo, R/H Harness	MT-3405 & 9000	196.65 **A**
14313 F	Flow, Servo, Boom Harness	Spraymate II	308.91 **A**
11039	NH3 Main Harness	MT-3000	416.29 **A**
11037	NH3 Flow, Servo, Shutoff Cable	MT-3000	129.15 **A**
13273	NH3 Flow, Servo, Shutoff Cable	All current consoles	504.23 **A**

FLOWMETER PARTS

PART#	DESCRIPTION	PRICE
10137	Teflon gasket FM750SS, FM750N, FM1000SS	8.53 **A**
10605	O-ring FM500	5.79 **A**
14836	Turbine FM750GFN, N, SS, FM1000SS, FM1500SS	155.84 **A**
13783	Quad O-ring FM750GFN	27.98 **A**
20182	Turbine FM500	114.86 **A**
11277	Bearing, Gasket Kit FM750, FM1000, FM1500	100.49 **A**

NH3 SYSTEM PARTS

PART#	DESCRIPTION	PRICE
10899	FM750N Flowmeter (NH3500)	1,108.95 **A**
12274C	FM1500SS Flowmeter (Liquifier)	1,308.00 **A**
19102B	NH3 Servo Valve	1,516.00 **A**
10233	Steel Vapor Tube	64.75 **A**
11008	3/8” FPT x 3/8” Vapor Tube (NH3500)	29.75 **A**
11009	3/4” MPT x 3/8” Vapor Tube (NH3500)	30.67 **A**

MOUNTING ACCESSORIES

PART#	DESCRIPTION	PRICE
10049	Mounting Bracket 84C Calc, FlowTrak	13.92 **A**
13181	Console Mounting Kit (base products)	34.97 **A**
13254	Console Mounting Kit MT-9000	66.75 **A**
10013	Mounting Bracket Speed Sensor	16.97 **A**
10080	Magnet Clip	11.19 **A**
12069	Magent Kit (6 magnets for speed)	18.33 **A**

FLOWMETER SENSOR CABLES

PART#	USED WITH	PRICE
10132	84C FlowTrak	114.01 **A**
10417	MT-3000/5000	95.42 **A**
13096	All current consoles	132.96 **A**

MAGNETIC SPEED SENSOR CABLES

PART#	USED WITH	PRICE
10074	84C Calc, FlowTrak	112.05 **A**
10416	MT-3000/5000	74.67 **A**
13096	All Current Consoles	132.96 **A**

EXTENSION CABLES

METRIPAK EXTENSION CABLES

PART#	DESCRIPTION	PRICE
13200	2-pin - 5' M/P Extension	74.21 **A**
13201	2-pin - 10' M/P Extension	80.11 **A**
13202	2-pin - 15' M/P Extension	86.60 **A**
13203	2-pin - 20' M/P Extension	90.39 **A**
13204	2-pin - 25' M/P Extension	97.80 **A**
13205	3-pin - 5' M/P Extension	82.01 **A**
13206	3-pin - 10' M/P Extension	87.55 **A**
13207	3-pin - 15' M/P Extension	98.34 **A**
13208	3-pin - 20' M/P Extension	104.69 **A**
13209	3-pin - 25' M/P Extension	111.73 **A**
14146	7-pin - 5' M/P Extension	194.70 **A**
14147	7-pin - 10' M/P Extension	281.69 **A**
14103	7-pin - 15' M/P Extension	364.32 **A**
14236	7-pin - 20' M/P Extension	442.77 **A**
14237	7-pin - 25' M/P Extension	516.51 **A**
13220	10-pin - 5' M/P Extension	142.53 **A**
13221	10-pin - 10' M/P Extension	170.20 **A**
13222	10-pin - 15' M/P Extension	194.62 **A**
13223	10-pin - 20' M/P Extension	233.12 **A**
13224	10-pin - 25' M/P Extension	274.69 **A**
14142	10-pin - 50' M/P Extension	506.84 **A**
14363	10-pin - 5' M/P 5/5 Extension	150.84 **A**
14316	10-pin - 10' M/P 5/5 Extension	223.65 **A**
14317	10-pin - 15' M/P 5/5 Extension	268.87 **A**
14364	10-pin - 20' M/P 5/5 Extension	330.30 **A**
14365	10-pin - 25' M/P 5/5 Extension	388.39 **A**
14419	10-pin - 50' M/P 5/5 Extension	666.77 **A**

WEATHERPAK EXTENSION CABLES

PART#	DESCRIPTION	PRICE
11560	2-pin - 5' W/P Extension	58.67 **A**
11561	2-pin - 10' W/P Extension	68.15 **A**
11671	2-pin - 15' W/P Extension	74.14 **A**
11672	2-pin - 20' W/P Extension	75.74 **A**
10450	3-pin - 5' W/P Extension	76.53 **A**
10449	3-pin - 10' W/P Extension	85.79 **A**
10876	3-pin - 15' W/P Extension	97.81 **A**
10829	3-pin - 20' W/P Extension	108.24 **A**
11462	3-pin - 25' W/P Extension	118.46 **A**
11050	6-pin - 5' W/P Extension	138.62 **A**
11051	6-pin - 10' W/P Extension	171.86 **A**
11052	6-pin - 20' W/P Extension	241.05 **A**

Wilger Electronic Flow Monitoring (EFM) System

Designed for AgChemical & Liquid Applications

The Wilger Electronic Flowmeter (EFM) is a fully serviceable electronic flowmeter & monitoring system specifically designed for agricultural chemical & liquid applications. Like visual ball flow indcators, the EFM system monitors variations in flow rate, but has the patented electronic flowmeters feature stabilizing jets for improved flow rate accuracy and consistency across a broad flow range. Plus, as part of Wilger's O-ring seal (ORS) fittings, the EFM can be easily configured as a new system or retrofitted into an existing visual flow indicator system as an electronic upgrade. Relying on wireless ECU technology and a user-friendly Android interface, the Wilger EFM eliminates sole relianceon visual flowmeter monitoring--delivering real-time, row-by-row monitoring accuracy and precision performance even in dark conditions.

System Highlights:

* Monitoring up to 196 meters on up to 10 sections
* Customizing & monitor up to 3 products simultaneously
* Compact & low maintenance--components are completely serviceable & replaceable
* ORS design enables retrofit installation into existing systems
* Eliminates visibility difficulties when applying dark liquids or during dark/dusty conditions
* Keyed Deutsch connectors ensure correct connections
* Easy to install, Easy to use--wireless WI-FI connection to in-cab Android tablet (no data required); Tablet not included
* Stabilizing jets accurately measure flow rates of 0.024 - 1.5 US GPM

**** CALL FOR SYSTEM DESIGN AND PRICING****

CR7

The CR7 is a 7-inch lighweight field computer with customizable in-job layouts. A simple widget concept, easily accessible settings, and ISO Universal Terminal and Task Controller capabilities make this mighty unit an affordable, plug-and-play system. The CR7 is compatible with Sligshot file transfer and remote support, SmarTrax autosteering, AccuBoom, Raven serial consoles, and more.

FEATURES & BENEFITS

* Multiple language support and customizable units
* Simplified, customizable widget layout
* Ability to access settings page from inside a job
* Map-based navigation
* Auto field boundaries keep you organized automatically
* Interactive field/job list and map view
* Slingshot-ready for file transfer, remote support, and OTA software updates
* Compatible with Raven AccuBoom, control consoles, and external lightbar support
* ISO Virtual Terminal and Task Controller functionality via unlock or subscription
* Straight A-B, A plus heading, pivot, contour, and last pass guidance
* Compatible with autosteer products including SmarTrax and SmarTrax MD
* Sub-meter single frequency GPS and GLONASS with compatible receiver
* Scalable GPS upgrades and VRA unlocks with compatible receiver

CALL FOR PRICING

RAVEN RATE CONTROL MODULE

The RCM uses Raven's innovative control algorithms to make it the most precise application controller on the market today.

It fits a variety of applications - up to five product liquid and granular control, NH3 (including Accu-Flow HP+), air cart and generic applicators. Sixteen-section control eliminates expensive skips and overlaps for all phases of your operation, from spraying to NH3, and fertilizer application to planting.

RCM is the ultimate advancement in precision and efficiency, and the next solution for your operation's success.

Features & Benefits

* **Easily navigate and manage multiple products, tallies and sensor data**
* **Diagnostic tests and reading to easily calibrate, tune and troubleshoot system**
* **Compatible with ISOBUS Universal Terminals and Task Controllers**
* **Multi language support**
* **IP 67 environmental rating for the harshest of environmental conditions**
* **Dynamically configure run screen based on operator preferences to show most relevant data during operation**

PART#	DESCRIPTION - Module & ISOBUS Harness, Kit	PRICE
117-7100-001	RCM Level 0, Gen 3 harness	5,459.00 A
117-7100-002	RCM Level 1, Gen 3 harness	6,231.50 A
117-7100-003	RCM Level 2, Gen 3 harness	7,333.54 A
117-7100-004	RCM Level 0, Gen 1 harness	5,150.00 A
117-7100-005	RCM Level 1, Gen 1 harness	5,922.50 A
117-7100-006	RCM Level 2, Gen 1 harness	7,036.53 A
PART#	**DESCRIPTION - Raven Flow Cables (All adapter harnesses work with John Deere Rate Control 2000**	**PRICE**
115-7347-055	6' Liquid, 6 Section Weatherpack	948.89 A
115-7347-054	6' Liquid, 10 Section Weatherpack	991.38 A
115-7347-051	6' NH3, Single Section	710.62 A
115-7347-005	6' NH3, 3 Section	1,370.23 A
115-7347-004	6' NH3, 6 Section	1,876.25 A
PART#	**DESCRIPTION - Adapter Cabels**	**PRICE**
115-7347-008	47 pin to 37 pin (RCM to Greenstar cable)	518.78 A
115-7347-012	47 pin to 16 pin (RCM to Raven SCS cable)	548.09 A
21400	37 pin to 16 pin (Greenstar to Raven SCS cable)	213.21 A

PART#	DESCRIPTION	PRICE
063-0171-183	440 CONSOLE 3-BOOM	1,593.28 **A**
063-0171-220	450 CONSOLE 6-BOOM	2,829.67 **A**

RAVEN SCS 440/450 SPRAYER CONTROL

RAVEN SCS 440/450 SPRAYER CONTROLLERS PROVIDE PRECISION SINGLE PRODUCT AUTOMATIC RATE CONTROL WITH THE FLEXIBILITY OF UP TO 7 BOOM SECTION INPUTS. TWO SEPARATE APPLICATION RATES CAN BE PROGRAMMED INTO THE CONTROLLERS AND SELECTED ON-THE-GO WITH THE FLIP OF A SWITCH. APPLICATION RATES CAN BE OVERRIDDEN TO ACCOMMODATE SPOT SPRAYING NEEDS EVEN WHEN IN AUTOMATIC.

THE SCS 440/450 CONSOLES ARE GPS COMPATIBLE FOR VARIABLE RATE APPLICATION AND DATA LOGGING. ALL LOGGED DATA CAN BE DOWNLOADED FOR USE IN DETERMINING FUTURE APPLICATION INFORMATION. USER FRIENDLY PROGRAMMING, NONVOLATILE MEMORY, EASY TO READ LIGHTED DISPLAY AND DATA LOCK, COMBINED WITH THE RELIABILITY, ACCURACY AND AFFORDABILITY OF RAVEN SYSTEMS MAKE THESE CONSOLES THE RIGHT CHOICE FOR SINGLE PRODUCT CHEMICAL APPLICATION.

SPRAY CONTROLLERS

RAVEN SCS 4400+ CONSOLE

SCS 4400+ CONSOLE

PART# 117-0159-924
$3,867.52 A

FOR YOUR CONVENIENCE AND SIMPLICITY, THE RAVEN SCS4400+ GIVES YOU SPRAYER CONTROL AND DATA LOGGING IN THE SAME UNIT.

- EASY TO READ DISPLAY
- GROUND SPEED COMPENSATED AUTO RATE CONTROL
- GPS COMPATIBLE
- 3-10 BOOM CONTROL
- LOW-LIMIT FUNCTION
- MULTIPLE AUDIBLE ALARMS
- DATALOG AS-APPLIED MAPS TO COMPACT FLASH
- 1/4 MONOCHROME DISPLAY
- 2 PROGRAMMABLE PRESET RATES
- PROGRAM DATA LOGGER THROUGH KEYPAD
- SERIAL INTERFACE CAPABILITIES
- COLLECTS ON-THE-GO APPLICATION INFORMATION
- EASY TO INSTALL AND OPERATE
- STORES INFORMATION IN SHAPEFILE OR ASCII FORMAT
- CONNECTS TO ANY NEW OR EXISTING GPS RECEIVER
- COMPATIBLE WITH COMMON MAPPING PROGRAMS
- AVAILABLE WITH BASIC MAP-VIEWING SOFTWARE

RAVEN ICD INJECTION PUMPS, SIDEKICK PRO

The new Sidekick Pro injection system has all the benefits of the standard Sidekick system but has a more advanced system design. The system uses a high resolution encoder for smooth pump control. The new automatic closed-system calibration is simple and fast. No more catch tests. The Sidekick Pro is compatible with the Raven line of field computers and the SCS 4000 series and SCS 5000 series spray consoles.

PART#	DESCRIPTION	PRICE
063-0173-771	ICD pump, with tank, 1-40 oz/min	8,336.97 **A**
063-0173-772	ICD pump, with tank, 5-200 oz/min	8,336.97 **A**
063-0173-780	ICD pump, less tank, 5-200 oz/min	7,902.68 **A**
063-0173-781	ICD pump, less tank, 1-40 oz/min	7,902.68 **A**

(866)775-8089
FAX (701)775-8217

SPEED SENSORS, FLOWMETERS & FLOWMAX 220

RAVEN RADAR & SPEED SENSORS

PART#	DESCRIPTION	PRICE
063-0159-484	WHEEL DRIVE SPEED SENSOR	610.41 **A**
063-0159-730	DRIVE SHAFT SENSOR	554.40 **A**
063-0171-669	FLOWMETER SENSOR	300.47 **A**
063-0172-004	FLOWMETER SENSOR (HIGH PULSE)	356.61 **A**

RAVEN FLOWMETERS

RFM-60P

RFM-15

NEW PART#	OLD PART#	DESCRIPTION	PORT	PRICE
063-0172-058	063-0172-040	.3 TO 15 GPM POLY	M200 FLANGED	572.31 **A**
063-0171-985	063-0171-793	1 TO 60 GPM POLY	M200 FLANGED	783.90 **A**

RFM100

RFM200

NEW PART#	OLD PART#	DESCRIPTION	PORT	PRICE
063-0173-578	063-0171-066	5 TO 100 GPM POLY	BANJO FLANGED	1,159.81 **A**
063-0159-579	063-0159-751	15 TO 200 GPM	3” FPT X 3” FPT	1,739.87 **A**

RFM-60S

NEW PART#	OLD PART#	DESCRIPTION	PORT	PRICE
063-0173-867	063-0171-666	1 TO 60 GPM STAINLESS	1-1/2” FPT	1,249.13 **A**

CONTROL VALVES

POLY BUTTERFLY VALVES

ALL POLYPROPYLENE CONSTRUCTION
FEATURES HIGH TORQUE,
12V DC MOTOR.
175 PSI RATING FOR USE WITH
CHEMICALS
AND LIQUID FERTILIZERS

PART#	DESCRIPTION	PRICE
063-0171-894	1-1/2" Valve	581.23 **A**
063-0171-120	3/4" Valve	319.93 **A**
063-0171-896	1-1/2" Valve Banjo Flanged	645.81 **A**
063-0172-125	1" Valve w/1" FPT Banjo Flanged	517.50 **A**

PWM HYDRAULIC VALVE

PART#	DESCRIPTION	PRICE
063-0171-842	0-10 GPM	1,255.51 **A**

NH3 VALVES

1" CARBON STEEL BUTTERFLY VALVE, 12-VOLT FOR USE WITH HIGH VOLUME APPLICATIONS, 400 PSI RATING. VITON O-RINGS & SEALS. (SHOWN)

NEW PART#	OLD PART#	DESCRIPTION	PRICE
063-0173-877	063-0172-977	Control Valve 1"	962.35 **A**
063-0173-876	063-0172-978	On-Off Butterfly Valve 1"	955.97 **A**
063-0173-878	063-0172-979	Fast Valve 1"	1,355.45 **A**

BOOM VALVES

PART#	DESCRIPTION	PRICE
063-0171-926	SINGLE	373.47 **A**
063-0171-928	3 SECTION	1,096.18 **A**

FEATURES:
Inlet Size Mates with M200 Series Banjo Fitting
Outlet Size is 3/4" Female NPT or Mates with M100 Series
Max Working Pressure is 175 PSI
Flow is 40 GPM at 10 PSI Pressure Drop. CV is 13
Plunger Style Valve for complete shut-off

(866)775-8089
FAX (701)775-8217

RAVEN CONTROL CABLE COMPONENTS

SCS 440 PART#	DESCRIPTION - 6 PIN MOLDED CONNECTOR	PRICE
115-0159-418	Console Cable 10’	577.37 A
115-0159-404	Flow Control 6’	374.12 A
115-0159-405	Flow Control 12’	461.03 A
115-0159-409	Flow Control Extension 12’	422.73 A
115-0159-414	Flow Control Extension 24’	509.63 A
SCS 440/450	**DESCRIPTION -16 PIN AMP CONNECTOR W/WEATHER PACK**	**PRICE**
115-0171-085	Console Cable 10’	628.94 A
115-0159-858	Flow Control, 3 Boom 6’	483.12 A
115-0171-055	Flow Control, 3 Boom 12’	608.32 A
115-0171-086	Flow Control, 6 Boom 6’	658.39 A
115-0171-129	Flow Control, 6 Boom 12’	711.42 A
115-0159-856	Flow Control Extension 12’	670.18 A
115-0159-857	Flow Control Extension 24’	658.39 A
SCS 440/450	**DESCRIPTION - 16 PIN AMP CONNECTOR W/SPADE ENDS**	**PRICE**
115-0159-859	Flow Control, 3 Boom 12’	494.90 A
115-0159-495	Flow Control, 7 Boom 6’	384.44 A
115-0159-496	Flow Control, 7 Boom 12’	493.43 A
SCS 440/450	**DESCRIPTION - NH3**	**PRICE**
115-0171-800	Flow Control, Single Section 12’	683.42 A
115-0171-836	Flow Control, 3 Section 12’	1,362.44 A
115-0171-807	Adapter, Old Flow to New NH3 Control	220.93 A
115-0171-808	Adapter, Old Flow to New NH3 On/Off	220.93 A

RADAR SPEED SENSOR INTERFACE CABLES

RADAR TYPE	VEHICLE TYPE	CONSOLE W/REV. "E" OR LATER	PRICE "E"
Raven Radar to 3rd Party Adapter			
	John Deere	115-0159-550	162.16 **A**
	Case-IH	115-0159-551	304.99 **A**
3rd Party Radar to Raven Speed Sensor Cable			
	Dickey-John/Vansco	115-0159-529	451.69 **A**
	Ford Gen/Vers/New Holland	115-0159-709	276.73 **A**
	John Deere		
	w/Magnavox Radar	115-0159-519	423.88 **A**
	7000/8000/9000/10 & 20 Series	115-0159-700	195.70 **A**
	30 Series	215 100	139.05 **A**
	Starfire to Raven	215 007	205.49 **A**
	Case IH		
	MX or STX	115-0159-517	469.70 **A**
	in Cab	115MXR	89.25 **A**
	CAT Challenger		
	65 or 75 Series	115-0159-518	352.82 **A**
	65 C/D, 75 C/D, 85D Row Crop	115-0159-627	236.56 **A**

**1990 Model year or later w/factory installed performance monitor.

SENTRY 6120

PART#	DESCRIPTION	PRICE
90-02846	Sentry 6120 System w/US Lighter Cable	1,469.19 **A**
90-02848	Sentry 6120 System w/Battery Leads	1,476.85 **A**
75-30118	Console, Sentry 6120	1,054.90 **A**
404-0045	Extension Cable, 18'/5m	149.92 **A**
404-0039	Extension Cable, 25'/8m	165.90 **A**

** Provides real time operating pressure and corresponding droplet size category feedback for liquid applications*
** Bright backlight adjustable touch screen*
** Image-based Tip Series and Tip Capacity settings allow for simple one-touch selection to choose your spray tip*
** Tip Capacity selection setting uses ISO color coding as well as text for easy identification and selection*
** Low Alarm and High Alarm alert operator when system pressure drops below or rises above the current pressure set point*
** Choose your unit of measurement setting: either US of metric*
** Save up to five spray tips to your "favorites" for quick setting retrieval*

UNIPILOT

PART#	DESCRIPTON	PRICE
91-02400	Kit, UniPilot System w/SCM, ESM and mounting bracket	9,165.96 **A**

*** Easy to Use and Even Easier to Install - Simply install a single, universal bracket onto the steering column and mount the UniPilot motor**
*** Improved Portability for Year-Round Use - UniPilot utilizes a universal mounting kit to fit wide range of vehicles. UniPilot can also be moved between vehicles with minimal effort; allowing you to maximize your investment and utilize it for multiple operations throughout the growing season**
*** UniPilot Adapts to Your Field Condidtions and Your Location Tilt compensation and gyro-stabilization are standard features that automatically correct side slope positional errors and ensure accuracy in all your field operations**

MANUAL CONTROLS & VALVES

744A Manual Sprayer Control

- Manual spray controller in a compact package
- Choice of Dry or Liquid filled gauge
- Heavy-duty switches with LED indicators
- Available in a variety of kit forms using solenoid valves
- Directo Valve shutoff ball valves are ordered separately

744A MANUAL CONTROL KITS				
PART#	Control Kit#	Qty per/kit	Kits using 144A & 244C Valves	Price
90-50161	AAK744A-100L-30S	1 1	744A-100L-3 Sprayer Control Unit 244C-3/4 Pressure regulating valve No valve	567.87 **A**
90-50163	AAK744A-100L-33S	1 1 3	744A-100L-3 Sprayer Control Unit 244C-3/4 Pressure regulating valve 144A Directo Valve Boom Section Valves	910.31 **A**
90-50177	AAK744A-100L-33P	1 1 3	744A-100L-3 Sprayer Control Unit 244C-3/4 Pressure regulating valve 144P Directo Valve Boom Section Valves	1,228.89 **A**

SPRAYING SYSTEMS SOLENOID VALVES					
PART#	INLET	OUTLET	MAX PSI	GPM	PRICE
AA144A-1	3/4”	1/2”	100	10	232.88 **V**
AA144A-2	3/4”	1/2”	100	10	471.74 **V**
AA144A-3	3/4”	1/2”	100	10	710.65 **V**
AA144P-1	3/4”	1/2”	100	10	320.94 **V**
AA144P-3	3/4”	1/2”	100	10	962.51 **V**

AA144A-1

AA144A-3

AA144P-3

PART# AA244C-3/4 $185.83 V

PRESSURE REGULATING BUTTERFLY VALVE

Butterfly Valve for 744A

The TeeJet butterfly valve provides remote pressure control and features a two-wire lead for use in 12 VDC systems. Its quality design features good consumption of 0.15 amp and 3/4” NPT or BSPT (F) connections.

Features:

Pressure drop of 5 PSI (0.35 bar) for 45 GPM (170 1/min) flow.
Maximum operating pressure is 100 PSI (7 bars).

(866)775-8089
FAX (701)775-8217

FLOW, PRESSURE & SPEED SENSORS

TEEJET SPEED SENSORS		
PART#	DESCRIPTION	PRICE
16-40007	Wheel speed sensor kit (2 magnets)	532.03 **A**
16-40012	Wheel speed sensor kit (4 magnets)	684.48 **A**
16-40003	Wheel speed sensor only	210.09 **A**
16-40013	Single magnet assembly	117.64 **A**
16-40004	Proximity speed sensor	147.24 **A**

Proximity Sensor

TeeJet proximity sensors are reliable and easy to use because they do not require magnets and will produce a signal from any metal object.

***Built-in LED at sensor.**
***Weather resistant connector.**
***Reverse polarity protected.**

Magnetic Sensor

The Magnetic speed sensor kit is designed for versatility and long life. All components are plated steel or aluminum, and each sensor is equipped with a built-in test light and waterproof connectors.

***Built-in LED at sensor.**
***Weather resistant connector.**
***Reverse polarity protected.**

TEEJET FLOWMETERS & PRESSURE SENSORS			
PART#	DESCRIPTION	RANGE	PRICE
90-50230	Kit, 801 Flowmeter w/1” hose barb	2.5-60 GPM	713.55 **A**
90-50231	Kit, 801 Flowmeter w/3/4” hose barb	2.5-60 GPM	713.55 **A**
90-50232	Kit, 801 Flowmeter w/1-1/4” hose barb	2.5-60 GPM	713.55 **A**
90-50233	Kit, 801 Flowmeter w/1-1/4” NPTF	2.5-60 GPM	713.55 **A**
57-10080	1/2” STD flowmeter w/1/2” hose barb	0.8-8 GPM	924.54 **A**
57-10096	3/4” STD flowmeter w/3/4” hose barb	1.9-37 GPM	935.38 **A**
57-10068	1” STD flowmeter w/1” hose barb	2.6-52.8 GPM	822.31 **A**
57-10081	1-1/2” STD flowmeter w/1-1/2” hose barb	9.2-92.5 GPM	969.52 **A**
57-10097	2” STD flowmeter w/2” hose barb	19-400 GPM	1,385.88 **A**
90-02476	Pressure sender, 1/4” NPT	0-145 PSI	448.03 **A**
90-02482	Pressure sender, 1/4” NPT	0-363 PSI	444.73 **A**

801 FLOWMETER

STANDARD FLOWMETER

PRESSURE SENSOR

SPRAY CONTROLLERS

RC1B WP Boon Control System
w/Regulator Switch
100 PSI Gauge
1560A Regulator

PART# RC1BWP
$645.96 A

RC1B WP 3 Boom Control System
w/Regulator Switch
100 PSI Gauge
1999A WP (3 Valve Bank)
Mounting Bracket
1541A Regulator

PART# 2040WP3
$1,416.22 A

RC-10N

Remote Control System with 1560A pressure regulator, with solenoid shutoff valve.

PART# RC-10N $490.71 A

Chemical Isolator
with mounting bracket and 1/8" female NPT threads without tube fittings.

PART# GI-18 $30.00 NET

2501B Solenoid Valve

Use these valves anytime you need direct \
shut-off control with no bypass.
12 Volt DC shut-off
1/2" NPT Female Inlet/Outlet,
6 GPM, 150 PSI

PART# 2501B $178.58 A

2504A Solenoid Valve

3WAY, 12 Volt
2GPM, 75 PSI
Weatherpack

PART# 2504BWP $202.17 A

1560A Pressure Regulator

Recommended for flow rates up to 50GPM.
3/4" NPT Female Inlet/Outlet
3/4" Orifice

PART# 1560A $207.49 A

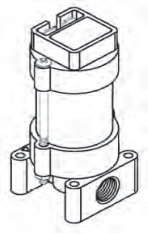

2201A Solenoid Valve

.148 Dia. Orifice, .45 CV Rating
1GPM, 125 PSI, 12-Volt DC, 1.1 Amp.
This is a good choice when large flow and high pressure are required.

PART# 2201A $136.50 A

PART# 2201 $20.00 NET

2202A Solenoid Valve

Ideal for small sprayers.
1/4" NPT Female Inlet
1.4" NPT Female Outlet
Weatherpack Connection

PART# 2202AWP $121.20 A

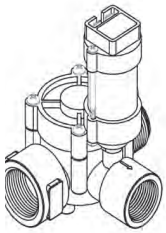

1999A Solenoid Valve

12-Volt DC Electric Boom Shutoff Valves have 1" NPT female outlete, 1" male bypass outlet and 3/4" NPT female boom line outlet for high volume applications at minimum pressure loss (pressure drop is only 5 PSI at 18 GPM). Max operating pressure, 175 PSI and 18 GPM.

PART# 1999A-1 $243.76 A

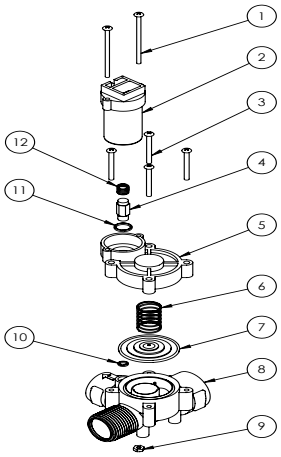

1999A PARTS			
REF#	PART#	DESCRIPTION	PRICE
8	1962	Valve Body	46.69 A
7	*1974	Viton Diaphragm Assembly, Standard	61.55 A
7	#2109	Aflas Diaphragm Assembly, Optional	86.29 A
6	*#1975	Spring	9.49 A
5	1963	Valve Cover	54.04 A
10	*#1976	Viton "O" Ring 010	5.87 A
1	5305	6-32 x 2 5/8 Screw (Req 2)	2.57 A
9	5306	Hex Nut (Req 2)	1.14 A
11	*#1977	Viton "O" Ring 014	6.63 A
4	*2239	Plunger w/Viton Seat, Standard	41.89 A
4	#2240	Plunger w/Aflas Seat, Optional	47.46 A
12	*#1979	Plunger Spring	9.66 A
2	2515	Coil Assembly	113.21 A
2A	2520	Coil Assembly, Weather Pack	115.83 A
3	5307	No. 8 x 1 1/2" Screw (Req 4)	2.52 A
	2168	"O" Ring 022	4.35 A
	2517	Viton Repair Kit - *	83.14 A
	2518	Aflas Repair Kit - #	119.67 A

HOSE BARBS POLY, STEEL& STAINLESS

POLYPROPYLENE		SCHD 80		STEEL		STAINLESS	
PART#	PRICE	PART#	PRICE	PART#	PRICE	PART#	PRICE
HB1814	0.74 D						
HB1838	0.74 D						
HB14	0.74 D	BHB14	1.60 D	HB14S	6.00 D	HB14SS	6.86 D
FHB14	3.11 D						
HB1438	0.74 D	BHB1438	1.60 D			HB1438SS	6.86 D
FHB1438	2.89 D						
HB1412	0.74 D	BHB1412	1.93 D			HB1412SS	6.86 D
HB3814	0.74 D	BHB3814	1.28 D				
FHB3814	2.48 D						
HB38	0.74 D	BHB38	1.73 D			HB38SS	8.39 D
FHB38	2.48 D						
HB3812	0.80 D	BHB3812	1.73 D			HB3812SS	8.39 D
FHB3812	2.48 D						
HB3858	0.80 D						
HB1214	0.80 D	BHB1214	1.45 D				
HB1238	0.88 D	BHB1238	1.73 D			HB1238SS	13.33 D
HB12	0.80 D	BHB12	1.45 D	HB12S	17.88 D	HB12SS	11.03 D
FHB12	2.81 D						
HB1258	0.88 D						
HB1234	0.88 D	BHB1234	1.93 D			HB1234SS	12.04 D
HB12100	3.00 D						
HB3414	1.05 D						
HB3438	1.05 D	BHB3438	1.93 D				
HB3412	1.05 D	BHB3412	1.93 D				
HB3458	1.05 D	BHB3458	2.35 D				
HB34	1.05 D	BHB34	1.60 D	HB34S	9.13 D	HB34SS	12.21 D
FHB34	3.60 D	BFHB34	4.70 D				
HB34100	2.60 D	BHB34100	2.35 D			HB34100SS	13.97 D
		BFHB34100	3.93 D				
HB10034	2.48 D	BHB10034	2.35 D			HB10034SS	29.95 D
HB100	2.61 D	BHB100	1.98 D	HB100S	16.25 D	HB100SS	18.42 D
		BFHB100	3.33 D				
		BHB100114	2.88 D				
		BHB11434	2.43 D				
		BHB114100	2.88 D				
		BHB114	2.88 D	HB114S	21.03 D	HB114SS	24.88 D
		BHB114112	5.50 D				
		BHB112100	4.30 D				
		BHB112114	4.30 D				
		BHB112	4.03 D	HB112S	23.50 D	HB112SS	32.27 D
		BHB112200	7.40 D				
		BHB200112	6.18 D				
		BHB200	4.90 D	HB200S	21.40 D	HB200SS	55.04 D
				HB212S	51.68 D		
		BHB300	15.85 D	HB300S	62.95 D	HB300SS	190.00 D
		BHB400	39.83 D				

POLY - HOSE BARB/MENDER ELBOWS

POLYPROPYLENE		SCHD 80		POLYPROPYLENE/SCHD 80		SWEEP	
PART#	PRICE	PART#	PRICE	PART#	PRICE	PART#	PRICE
HBE1814	1.24 D						
HBE1838	1.27 D						
HBE14	1.27 D	BHBE14	1.93 D	HME14	1.16 D		
HBE1438	1.29 D	BHBE1438	1.93 D				
FHBE1438	3.15 D						
HBE1412	1.32 D	BHBE1412	1.93 D				
HBE1458	2.48 D						
HBE3814	1.27 D						
HBE38	1.40 D	BHBE38	2.43 D	HME38	1.27 D		
HBE3812	1.38 D						
FHBE3812	3.55 D						
HBE3858	1.51 D						
HBE1214	1.43 D						
HBE1238	1.40 D	BHBE1238	1.93 D				
HBE12	1.40 D	BHBE12	1.93 D	HME12	1.27 D		
HBE1258	1.65 D						
HBE1234	1.71 D	BHBE1234	1.93 D				
HBE12100	2.75 D						
				HME58	1.21 D		
HBE3438	1.76 D						
HBE3414	1.51 D						
HBE3412	1.87 D	BHBE3412	2.43 D				
FHBE3412	4.80 D						
HBE3458	1.95 D						
HBE34	1.95 D	BHBE34	2.03 D	HME34	1.68 D	HB075SW90	5.33 D
FHBE34	3.55 D						
HBE34100	2.20 D	BHBE34100	2.43 D				
HBE10012	2.53 D						
HBE10034	2.26 D	BHBE10034	3.10 D	BHME100	3.20 D		
HBE100	2.31 D	BHBE100	2.88 D	HME100	2.56 D	HB100SW90	6.89 D
		BHBE100114	3.80 D				
		BHBE114100	3.80 D				
		BHBE114	3.80 D	HME114	10.43 D	HB125SW90	10.95 D
		BHBE114112	10.90 D				
		BHBE112114	10.90 D				
		BHBE112	9.10 D	HME112	9.95 D	HB150SW90	11.73 D
				BHME200114	15.88 S		
		BHBE200112	11.95 D				
		BHBE200	9.95 D	HME200	19.40 D	HB200SW90	12.36 D
		BHBE300	48.10 D			HB300SW90	42.33 D

MENDERS, TEES & Y HOSE BARBS - POLY

MENDERS

POLYPROPYLENE — SCHD 80

PART#	PRICE	PART#	PRICE
HM18	0.55 D		
HM14	0.74 D		
HM38	0.80 D	BHM38	1.78 D
HM1238	0.94 D		
HM12	0.85 D	BHM12	1.85 D
HM58	0.94 D		
HM5812	0.96 D		
HM34	1.10 D	BHM34	2.00 D
HM100	1.38 D	BHM100	2.43 D
		BHM114	2.73 D
		BHM112	4.83 D
		BHM200	6.05 D
		BHM300	18.93 D

1/4" GAUGE TEE — **"Y" HOSE BARB**

PART#	PRICE	PART#	PRICE
GTT12	3.77 D		
GTT34	8.37 D		
BGTT34	25.68 D		
BGTT100	25.68 D	YHB38	4.68 D
		YHB12	4.40 D

MALE THREADED TEE

MTT12	3.70 D

HOSEBARB x MALE THREAD

PART#	BHBEL150/100-90	PRICE	29.15 D

HOSE BARB TEES

POLYPROPYLENE — SCHD 80

PART#	PRICE	PART#	PRICE
HBT18	1.16 D		
HBT14	1.46 D		
HBT38	1.32 D	BHBT38	2.15 D
HBT3812	1.38 D		
HBT1238	1.38 D		
HBT12	1.38 D	BHBT12	3.33 D
HBT1234	5.83 D	BHBT1234	3.33 D
HBT58	1.65 D		
HBT3412	1.71 D	BHBT3412	3.33 D
HBT34	1.71 D	BHBT34	3.33 D
		BHBT34100	2.85 D
		BHBT10034	2.93 D
HBT100	1.38 D	BHBT100	3.50 D
HBT114	5.47 D	BHBT200	13.33 D
HBT112	6.22 D	BHBT300	37.05 D
HBT200	16.74 D		

HOSEBARB CROSS	
BHBC1234	21.25 D

MPT x HOSE BARB TEE — POLYPROPYLENE

FPT x HOSE BARB TEE — POLYPROPYLENE

PART#	PRICE	PART#	PRICE
HBTM14	1.40 D		
HBTM1438	1.40 D		
HBTM1412	1.40 D		
HBTM38	1.40 D		
HBTM3812	1.40 D		
HBTM1238	1.51 D		
HBTM12	1.65 D		
HBTM1234	1.98 D		
HBTM3412	2.70 D		
HBTM34	2.83 D	HBTF34	6.85 D
HBTM34100	2.72 D		
		HBTF34114	8.44 D
BHBTM100	9.70 D		
BHBTM112100	24.33 D		
BHBTM112	46.58 D		

(866)775-8089
FAX (701)775-8217

POLY - BUSHINGS & NIPPLES

CLOSE & REDUCING NIPPLES

POLYPROPYLENE		SCHD 80	
PART#	**PRICE**	**PART#**	**PRICE**
CN18	.74 D	BCN18	.68 D
CN14	.83 D	BCN14	1.70 D
CN38	.74 D	BCN38	1.85 D
CN12	.85 D	BCN12	2.18 D
CN34	1.10 D	BCN34	2.18 D
CN100	1.43 D	BCN100	2.30 D
		BCN114	2.85 D
		BCN112	4.35 D
		BCN200	4.93 D
		BCN300	15.48 D
RCN1418	.74 D		
RCN3818	.80 D		
RCN3814	.80 D		
RCN1218	.83 D		
RCN1214	.83 D		
RCN1238	.83 D	BRCN1238	2.90 D
RCN3438	.99 D		
RCN3412	.99 D	BRCN3412	3.10 D
		BRCN10012	4.03 D
		BRCN10034	3.65 D
		BRCN11434	4.20 D
		BRCN114100	3.83 D
		BRCN112100	4.53 D
		BRCN112114	4.08 D
		BRCN200114	5.53 D
		BRCN200112	4.50 D
		BRCN300200	15.40 D

REDUCER BUSHINGS

POLYPROPYLENE		SCHD 80	
PART#	**PRICE**	**PART#**	**PRICE**
RB3818	2.61 D		
RB3814	1.90 D	BRB3814	3.83 D
RB1214	2.17 D	BRB1214	3.18 D
RB1238	1.90 D	BRB1238	3.83 D
RB3418	3.08 D		
RB3414	2.37 D	BRB3414	3.83 D
RB3438	2.37 D	BRB3438	3.83 D
RB3412	2.37 D	BRB3412	3.83 D
		BRB10014	4.08 D
RB10012	2.81 D	BRB10012	4.08 D
RB10034	2.17 D	BRB10034	3.35 D
		BRB11434	4.08 D
		BRB114100	4.08 D
		BRB11234	5.35 D
		BRB112100	5.35 D
		BRB112114	5.35 D
		BRB20034	4.85 D
		BRB200100	4.85 D
		BRB200114	5.83 D
		BRB200112	4.85 D
		BRB300112	24.28 D
		BRB300200	20.23 D
		BRB400300	37.65 D

PIPE SIZE COMPARISON

PART# CONTAINS	PIPE SIZE	APPROX. INCHES OUTSIDE
18	1/8”	1/4”
14	1/4”	1/2”
38	3/8”	5/8”
12	1/2”	3/4”
34	3/4”	1”
100	1”	1-1/4”
114	1-1/4”	1-5/8”
112	1-1/2”	2”
200	2”	2-3/8”
300	3”	3-1/2”
400	4”	4-1/2”

POLY - CAPS, PLUGS, COUPLERS CROSSES & TEES

PLUGS

POLYPROPYLENE — SCHD 80

PART#	PRICE	PART#	PRICE
PL18	.66 D		
PL14	.72 D	BPL14	4.05 D
PL38	.74 D	BPL38	4.05 D
PL12	.80 D	BPL12	4.08 D
PL34	.91 D	BPL34	4.08 D
PL100	1.21 D	BPL100	4.08 D
		BPL114	5.33 D
		BPL112	5.33 D
		BPL200	5.38 D
		BPL300	25.40 D

THREADED TEES & CROSSES

POLYPROPYLENE — SCHD 80

PART#	PRICE	PART#	PRICE
TT14	3.82 D	BTT14	5.45 D
		BTT38	5.63 D
TT12	3.59 D	BTT12	4.93 D
TT34	5.31 D	BTT34	5.30 D
		BTT100	7.65 D
		BTT114	10.58 D
		BTT112	12.35 D
		BTT200	15.73 D
		BTT300	73.25 D

CROSSES

		BCR12	25.88 D
		BCR34	25.88 D
		BCR100	25.88 D
		BCR114	38.58 D
		BCR112	38.58 D
		BCR200	39.38 D

CAPS

POLYPROPYLENE — SCHD 80

PART#	PRICE	PART#	PRICE
CAP14	.53 D		
CAP12	.66 D	BCAP12	7.83 D
CAP38	.50 D	BCAP38	3.13 D
CAP34	.85 D	BCAP34	7.83 D
		BCAP100	6.53 D
		BCAP114	8.80 D
		BCAP112	11.08 D
		BCAP200	12.83 D
		BCAP300	45.95 D

POLYPROPYLENE — SCHD 80

PART#	PRICE	PART#	PRICE
CP18	3.36 D		
CP14	3.36 D	BCP14	5.20 D
CP38	3.36 D	BCP38	5.83 D
CP12	3.80 D	BCP12	5.83 D
CP34	3.80 D	BCP34	5.70 D
		BCP100	5.53 D
		BCP114	8.93 D
		BCP112	12.38 D
		BCP200	14.13 D
		BCP300	45.95 D
RCP1438	3.17 D		
RCP1238	3.17 D		
RCP3438	3.17 D		
RCP3412	3.19 D		
		BRCP10034	8.63 D
		BRCP112100	14.65 D
		BRCP112114	14.65 D
		BRCP20012	15.58 D
		BRCP200100	12.98 D
		BRCP200114	15.58 D
		BRCP200112	12.98 D
		BRCP300200	46.05 D

POLY - ELBOWS & NIPPLES

STREET ELBOWS 90º

POLYPROPYLENE SCHD 80

PART#	PRICE	PART#	PRICE
SE14	2.17 D	BSE14	4.18 D
SE38	3.25 D	BSE38	4.90 D
SE12	2.30 D	BSE12	4.45 D
SE34	3.25 D	BSE34	4.75 D
		BSE100	5.63 D
		BSE114	7.75 D
		BSE112	10.98 D
		BSE200	13.03 D
		BSE300	66.20 D

THREADED ELBOWS 90º

POLYPROPYLENE SCHD 80

PART#	PRICE	PART#	PRICE
		BTE14	4.18 D
		BTE38	5.65 D
TE12	4.76 D	BTE12	5.10 D
TE34	4.10 D	BTE34	4.63 D
		BTE100	5.43 D
		BTE114	8.13 D
		BTE112	12.48 D
		BTE200	12.63 D
		BTE300	64.20 D

THREADED ELBOW 45º

POLYPROPYLENE SCHD 80

PART#	PRICE	PART#	PRICE
		BTE100-45	17.53 D

STREET ELBOWS 45º

POLYPROPYLENE SCHD 80

PART#	PRICE	PART#	PRICE
SE14-45	3.10 D		
SE34-45	3.17 D	BSE34-45	9.18 D
		BSE100-45	12.35 D
		BSE114-45	15.28 D
		BSE112-45	15.93 D
		BSE200-45	17.55 D
		BSE300-45	72.73 D

PIPE NIPPLES

PVC SCHD 80

DESCRIPTION	PART#	PRICE
1/2" PIPE x 3" LONG	BN12-3	3.68 D
1/2" PIPE x 12" LONG	BN12-12	3.53 D
3/4" PIPE x 4" LONG	BN34-4	3.83 D
3/4" PIPE x 6" LONG	BN34-6	4.50 D
1" PIPE x 4" LONG	BN100-4	4.08 D
1" PIPE x 6" LONG	BN100-6	5.03 D
1" PIPE x 12" LONG	BN100-12	6.59 D
1-1/4" PIPE x 4" LONG	BN114-4	5.03 D
1-1/4" PIPE X 6" LONG	BN114-6	5.73 D
1-1/2" PIPE x 3" LONG	BN112-3	6.45 D
1-1/2" PIPE x 4" LONG	BN112-4	10.75 D
1-1/2" PIPE x 5" LONG	BN112-5	12.05 D
1-1/2" PIPE x 6" LONG	BN112-6	12.65 D
2" PIPE x 4" LONG	BN200-4	10.40 D
2" PIPE x 6" LONG	BN200-6	12.15 D
2" PIPE x 12" LONG	BN200-12	17.60 D
3" PIPE x 4" LONG	BN300-4	23.23 D
3" PIPE x 6" LONG	BN300-6	29.98 D

GARDEN HOSE FITTINGS

GARDEN HOSE FITTINGS		
PART#	DESCRIPTION	PRICE
GHFT075A	3/4” Adapter x 3/4” Garden Hose Female Thread	6.70 **D**
GHMT075B	3/4” Coupler x 3/4” Garden Hose Male Thread	20.78 **D**
GHFT075D	3/4” Coupler x 3/4” Garden Hose Female Thread	23.55 **D**
GHMT075F	3/4” Adapter x 3/4” Garden Hose Male Thread	6.70 **D**
GHFT075MPT	3/4” Male NPT x 3/4” Garden Hose Female Thread	5.80 **D**
GHMT075FPT	3/4” Female NPT x 3/4” Garden Hose Male Thread	5.80 **D**
GHMT075MPT	3/4” Male NPT x 3/4” Garden Hose Male Thread	6.70 **D**

WASHERS		
PART#		PRICE
GW107	Filter Washer	0.59 **D**
GW300	Sta-Put Washer	0.13 **D**

SWIVEL NUT MPT		
SIZE	PART#	PRICE
3/4”	SN34	1.65 **D**

MALE GARDEN HOSE X MPT		
SIZE	PART#	PRICE
3/8”	GMM38	.75 **D**
1/2”	GMM12	.75 **D**
3/4”	GMM34	1.00 **D**

MALE GARDEN HOSE X FPT		
SIZE	PART#	PRICE
1/4”	GFP14	2.08 **D**
1/2”	GFP12	2.09 **D**
3/4”	GFP34	2.03 **D**

VALVES		
PART#		PRICE
GLA3	Shut-off	2.92 **D**
GLA23	“Y”	3.84 **D**

MALE GARDEN HOSE X BARB		
SIZE	PART#	PRICE
1/4”	GHB14	0.75 **D**
3/8”	GHB38	0.75 **D**
1/2”	GHB12	0.75 **D**
5/8”	GHB58	0.75 **D**
3/4”	GHB34	0.75 **D**

HOSE SHANK		
SIZE	PART#	PRICE
1/4”	HS14	.53 **D**
3/8”	HS38	.59 **D**
1/2”	HS12	.59 **D**
5/8”	HS58	.59 **D**
3/4”	HS34	.59 **D**
1”	HS100	1.25 **D**

FEMALE GARDEN HOSE X MPT		
SIZE	PART#	PRICE
3/4”	GMP34	2.04 **D**

FEMALE GH X MALE GH		
SIZE	PART#	PRICE
3/4”	GMF34	2.03 **D**

FEMALE GH END CAP		
SIZE	PART#	PRICE
3/4”	GEC34	0.66 **D**

FEMALE GARDEN HOSE X FPT		
SIZE	PART#	PRICE
1/2”	GFF12	2.03 **D**

FEMALE GH SWIVEL NUT		
SIZE	PART#	PRICE
3/4”	GSN34	.66 **D**

STEEL & STAINLESS BUSHINGS &COUPLERS
BRASS FITTINGS ALSO AVAILABLE

REDUCER BUSHINGS

STEEL SCHD 40 | **STAINLESS**

PART#	PRICE	PART#	PRICE
RB1418S	1.73 **D**	RB1418SS	3.05 **D**
RB3814S	1.89 **D**	RB3814SS	3.33 **D**
RB1214S	4.88 **D**	RB1214SS	4.22 **D**
RB1238S	4.88 **D**	RB1238SS	4.22 **D**
		RB3418SS	6.18 **D**
RB3414S	3.49 **D**	RB3414SS	6.18 **D**
RB3438S	3.49 **D**	RB3438SS	6.18 **D**
RB3412S	3.49 **D**	RB3412SS	6.18 **D**
RB10012S	4.57 **D**	RB10012SS	8.57 **D**
RB10034S	4.57 **D**	RB10034SS	8.57 **D**
		RB11434SS	15.33 **D**
RB114100S	6.54 **D**	RB114100SS	15.33 **D**
RB112100S	7.47 **D**	RB112100SS	18.35 **D**
RB112114S	7.47 **D**	RB112114SS	18.35 **D**
RB200100S	15.84 **D**	RB200100SS	27.99 **D**
RB200112S	15.84 **D**	RB200112SS	27.99 **D**
RB212200S	27.16 **D**	RB212200SS	47.97 **D**
RB300112S	41.62 **D**	RB300112SS	73.52 **D**
RB300200S	41.62 **D**	RB300200SS	73.52 **D**
RB400300S	75.72 **D**		

COUPLERS | **REDUCER COUPLER**

STEEL SCHD 40 | **STAINLESS** | **STEEL**

PART#	PRICE	PART#	PRICE	PART#	PRICE
CP14S	4.57 **D**	CP14SS	4.22 **D**	RCP1418S	4.43 **D**
CP38S	4.57 **D**	CP38SS	4.91 **D**	RCP1214S	4.04 **D**
CP12S	3.71 **D**	CP12SS	6.96 **D**	RCP3412S	4.38 **D**
CP34S	4.38 **D**	CP34SS	10.05 **D**	RCP10034S	6.79 **D**
CP100S	6.61 **D**	CP100SS	15.27 **D**	RCP114100S	8.49 **D**
CP114S	8.49 **D**	CP114SS	24.28 **D**	RCP112100S	12.41 **D**
CP112S	11.32 **D**	CP112SS	28.81 **D**	RCP200114S	17.79 **D**
CP200S	16.49 **D**	CP200SS	40.61 **D**	RCP200112S	15.56 **D**
CP300S	60.69 **D**	CP300SS	115.24 **D**	RCP212112S	46.26 **D**

STEEL & STAINLESS STREET & THREADED ELBOWS
BRASS FITTINGS ALSO AVAILABLE

STREET ELBOWS 90º

STEEL SCHD 40		STAINLESS	
PART#	**PRICE**	**PART#**	**PRICE**
SE14S	5.53 **D**	SE14SS	6.68 **D**
SE38S	5.53 **D**	SE38SS	8.04 **D**
SE12S	5.16 **D**	SE12SS	9.46 **D**
SE34S	5.53 **D**	SE34SS	13.13 **D**
SE100S	7.95 **D**	SE100SS	22.72 **D**
SE114S	12.14 **D**	SE114SS	33.00 **D**
SE112S	16.21 **D**	SE112SS	39.04 **D**
SE200S	26.28 **D**	SE200SS	52.87 **D**
SE300S	98.94 **D**	SE300SS	133.32 **D**

THREADED ELBOWS 90º

STEEL SCHD 40		STAINLESS	
PART#	**PRICE**	**PART#**	**PRICE**
TE18S	3.85 **D**	TE18SS	4.68 **D**
TE14S	3.66 **D**	TE14SS	4.68 **D**
TE38S	3.66 **D**	TE38SS	5.81 **D**
TE12S	2.74 **D**	TE12SS	6.18 **D**
TE34S	3.35 **D**	TE34SS	8.87 **D**
TE100S	5.82 **D**	TE100SS	12.58 **D**
TE114S	9.43 **D**	TE114SS	22.08 **D**
TE112S	12.41 **D**	TE112SS	29.38 **D**
TE200S	21.25 **D**	TE200SS	37.25 **D**
TE300S	68.83 **D**	TE300SS	108.13 **D**

PIPE SIZE COMPARISON

PART# CONTAINS	PIPE SIZE	APPROX. INCHES OUTSIDE
18	1/8”	1/4”
14	1/4”	1/2”
38	3/8”	5/8”
12	1/2”	3/4”
34	3/4”	1”
100	1”	1-1/4”
114	1-1/4”	1-5/8”
112	1-1/2”	2”
200	2”	2-3/8”
300	3”	3-1/2”
400	4”	4-1/2”

STEEL & STAINLESS NIPPLES, UNIONS & CROSSES
BRASS FITTINGS ALSO AVAILABLE

PIPE NIPPLE

STEEL SCHD 40 | **STAINLESS**

PART#	PRICE	PART#	PRICE
CN14S	2.68 **D**	CN14SS	2.39 **D**
CN38S	2.74 **D**	CN38SS	2.87 **D**
CN12S	2.30 **D**	CN12SS	3.70 **D**
CN12S-2	2.30 **D**	CN12-2SS	5.35 **D**
CN12S-212	2.74 **D**	CN12-212SS	6.41 **D**
CN12S-3	2.74 **D**	CN12-3SS	7.47 **D**
CN12S-4	3.31 **D**	CN12-4SS	9.62 **D**
CN34S	2.68 **D**	CN34SS	4.99 **D**
CN34S-2	2.84 **D**	CN34-2SS	6.37 **D**
CN34S-3	3.25 **D**	CN34-3SS	8.93 **D**
CN100S	3.84 **D**	CN100SS	6.56 **D**
CN100S-3	4.20 **D**	CN100-3SS	11.42 **D**
CN100S-4	5.52 **D**	CN100-4SS	14.71 **D**
CN100S-6	7.63 **D**	CN100-6SS	21.32 **D**
CN114S	4.88 **D**	CN114SS	8.82 **D**
CN112S	6.09 **D**	CN112SS	10.80 **D**
CN200S	8.25 **D**	CN200SS	16.76 **D**
CN300S	30.63 **S**	CN300SS	47.83 **D**

UNIONS

STEEL | **STAINLESS**

PART#	PRICE	PART#	PRICE
UN14S	18.77 **D**	UN14SS	15.79 **D**
UN38S	12.67 **D**	UN38SS	16.09 **D**
UN12S	12.12 **D**	UN12SS	17.42 **D**
UN34S	15.37 **D**	UN34SS	22.08 **D**
UN100S	19.79 **D**	UN100SS	33.30 **D**
UN114S	25.00 **D**	UN114SS	57.75 **D**
UN112S	32.37 **D**	UN112SS	65.32 **D**
UN200S	46.12 **D**	UN200SS	78.21 **D**
UN300S	134.94 **D**	UN300SS	240.06 **D**

CROSSES

STEEL | **STAINLESS**

PART#	PRICE	PART#	PRICE
CR14S	11.20 **D**	CR14SS	10.92 **D**
CR38S	11.42 **D**	CR38SS	13.01 **D**
CR12S	12.98 **D**	CR12SS	16.03 **D**
CR34S	14.41 **D**	CR34SS	27.42 **D**
CR100S	19.50 **D**	CR100SS	40.58 **D**
CR114S	31.64 **D**	CR114SS	48.19 **D**
CR112S	39.19 **D**	CR112SS	59.69 **D**
CR200S	64.90 **D**	CR200SS	85.46 **D**
CR300S	170.63 **D**	CR300SS	265.30 **D**

STEEL & STAINLESS TEES, PLUGS & CAPS
BRASS FITTINGS ALSO AVAILABLE

TEES

STEEL | **STAINLESS**

PART#	PRICE	PART#	PRICE
TT14S	5.53 D	TT14SS	6.27 D
TT38S	5.53 D	TT38SS	7.99 D
TT12S	3.58 D	TT12SS	8.39 D
TT34S	5.05 D	TT34SS	13.35 D
TT100S	8.92 D	TT100SS	17.00 D
TT114S	14.47 D	TT114SS	48.19 D
TT112S	18.02 D	TT112SS	42.03 D
TT200S	29.75 D	TT200SS	53.99 D
TT300S	91.01 D	TT300SS	150.19 D

PLUGS — **HOLLOW STEEL** | **STAINLESS**

CAPS — **STAINLESS**

PART#	PRICE	PART#	PRICE	PART#	PRICE
PL14S	3.26 D	PL14SS	2.39 D	C14SS	3.37 D
PL38S	3.26 D	PL38SS	3.20 D	C38SS	3.97 D
PL12S	2.51 D	PL12SS	4.58 D	C12SS	4.12 D
PL34S	2.51 D	PL34SS	5.56 D	C34SS	5.15 D
PL100S	3.15 D	PL100SS	7.04 D	C100SS	7.75 D
PL114S	3.97 D	PL114SS	14.01 D	C114SS	14.01 D
PL112S	5.51 D	PL112SS	16.72 D	C112SS	18.40 D
PL200S	8.65 D	PL200SS	19.78 D	C200SS	23.46 D
PL300S	17.67 D	PL300SS	47.37 D	C300SS	58.49 D

THREAD SEALANT, TAPE & LIQUID

PART#	DESCRIPTION	PRICE
TTAPE	TEFLON TAPE 1/2" X 520"	1.70 D
TTAPEW	TEFLON TAPE 3/4" X 520"	2.98 D
RE31780	TRU BLUE 2 oz TUBE	11.70 D
RE31551	TRU BLUE PINT	35.55 D

PART#	DESCRIPTION	PRICE
RE25790	RECTORSEAL #5 TUBE	8.50 A
RE25631	RECTORSEAL #5 1/4 PINT	16.08 A
RE25551	RECTORSEAL #5 1/2 PINT	26.18 A
RE25431	RECTORSEAL #5 PINT	42.20 A
RE28651	RECTORSEAL #21 1/2 PINT	28.94 A
RE28541	RECTORSEAL #21 PINT	45.26 A

CAM LEVER COUPLERS ALUMINUM

"A" MALE ADAPTER		
SIZE	PART#	PRICE
1-1/2"	A112A	7.23 **R**
2"	A2A	11.30 **R**
2-1/2"	A212A	24.20 **R**
3"	A3A	14.08 **R**
4"	A4A	35.55 **R**
6"	A6A	69.38 **R**

"B" FEMALE COUPLER		
SIZE	PART#	PRICE
1-1/2"	A112B	16.25 **R**
2"	A2B	19.47 **R**
2-1/2"	A212B	38.47 **R**
3"	A3B	36.33 **R**
4"	A4B	47.44 **R**
6"	A6B	140.60 **R**

"C" FEMALE COUPLER		
SIZE	PART#	PRICE
1-1/2"	A112C	12.40 **R**
2"	A2C	22.66 **R**
2-1/2"	A212C	42.08 **R**
3"	A3C	41.91 **R**
4"	A4C	58.60 **R**
6"	A6C	159.19 **R**

"D" FEMALE ADAPTER		
SIZE	PART#	PRICE
1-1/2"	A112D	19.03 **R**
2"	A2D	22.11 **R**
2-1/2"	A212D	42.08 **R**
3"	A3D	38.09 **R**
4"	A4D	53.21 **R**
6"	A6D	146.86 **R**

"DC" DUST CAP		
SIZE	PART#	PRICE
1-1/2"	A112DC	24.70 **R**
2"	A2DC	17.11 **R**
2-1/2"	A212DC	34.50 **R**
3"	A3DC	30.06 **R**
4"	A4DC	46.53 **R**
6"	A6DC	123.37 **R**

"DP" DUST PLUG		
SIZE	PART#	PRICE
1-1/2"	A112DP	8.80 **R**
2"	A2DP	10.04 **R**
2-1/2"	A212DP	16.61 **R**
3"	A3DP	17.52 **R**
4"	A4DP	28.55 **R**
6"	A6DP	63.27 **R**

"E" MALE ADAPTER		
SIZE	PART#	PRICE
1-1/2"	A112E	12.13 **R**
2"	A2E	13.89 **R**
2-1/2"	A212E	25.00 **R**
3"	A3E	29.78 **R**
4"	A4E	47.99 **R**
6"	A6E	104.51 **R**

"F" MALE ADAPTER		
SIZE	PART#	PRICE
1-1/2"	A112F	10.95 **R**
2"	A2F	13.89 **R**
2-1/2"	A212F	28.55 **R**
3"	A3F	31.90 **R**
4"	A4F	45.54 **R**
6"	A6F	96.82 **R**

CAM LEVER COUPLERS - POLY

MALE ADAPTER X FPT "A"		
PART #	DESCRIPTION	PRICE
B12A	3/4" x 1/2" FPT	7.40 D
B34A14	3/4" x 1/4" FPT	7.40 D
B34A	3/4"	6.18 D
B100A	1"	6.18 D
B100A114	1" x 1-1/4" FPT	6.18 D
B114A	1-1/2" x 1-1/4" FPT	8.43 D
B112A	1-1/2"	7.00 D
B200A	2"	8.25 D
300200A	2" x 3" FPT	15.87 D
B300A	3"	19.93 D
B400A	4"	36.50 D

MALE ADAPTER X FPT "90A"		
PART #	DESCRIPTION	PRICE
150A90	1-1/2"	13.25 D
200A90	2"	15.10 D

FEMALE COUPLER X MALE ADAPTER		
PART #	DESCRIPTION	PRICE
303B200A	3" X 2"	69.38 D

FEMALE COUPLER X MPT "B"		
PART #	DESCRIPTION	PRICE
B12B	3/4" x 1/2" MPT	16.93 D
B34B	3/4"	14.10 D
B100B	1"	16.20 D
B100B114	1" X 1-1/4" MPT	16.20 D
B114B	1-1/2" x 1-1/4" MPT	22.80 D
B112B	1-1/2"	19.00 D
B200B	2"	23.13 D
B300B	3"	38.85 D
303B	3" Extended Thread	49.83 D
B400B	4"	92.38 D

FEMALE COUPLER X MPT "90B"		
PART#	DESCRIPTION	PRICE
200B90	2"	33.85 D

CAP "DC"		
PART #	DESCRIPTION	PRICE
B12CAP	3/4"	14.10 D
B34CAP	3/4"	14.10 D
B100CAP	1" - 1-1/4"	15.58 D
B112CAP	1-1/2"	19.00 D
B200CAP	2"	23.13 D
B300CAP	3"	38.85 D
B400CAP	4"	56.15 D

FEMALE COUPLER X BARB "C"		
PART #	DESCRIPTION	PRICE
B12C	3/4" x 1/2" HS	14.10 D
B34C	3/4"	14.10 D
B100C	1"	16.20 D
B100C114	1" X 1-1/4" HS	16.20 D
B114C	1-1/2" x 1-1/4" HS	22.83 D
B112C	1-1/2"	19.00 D
B200C	2"	23.13 D
B300C	3"	38.85 D
303C	3" w/3 Arms	49.83 D
B400C	4"	76.98 D

FEMALE COUPLER X BARB "90C"		
PART #	DESCRIPTION	PRICE
150C90	1-1/2"	27.30 D
200C90	2"	28.18 D

PLUG "DP"		
PART #	DESCRIPTION	PRICE
B12PL	3/4"	6.68 D
B34PL	3/4"	6.68 D
B100PL	1" & 1-1/4"	6.40 D
B112PL	1-1/2"	8.58 D
B200PL	2"	9.68 D
B300PL	3"	20.28 D
B400PL	4"	28.70 D
PLUG w/HANDLE		
200PLH	2"	17.78 D
300PLH	3"	27.14 D

CAM LEVER COUPLERS - POLY

FEMALE COUPLER X FPT "D"		
PART #	DESCRIPTION	PRICE
B12D	3/4" x 1/2" FPT	14.10 D
B34D	3/4"	14.10 D
B100D	1"	16.20 D
B100D114	1" X 1-1/4" FPT	16.20 D
B114D	1-1/2" x 1-1/4" FPT	22.83 D
B112D	1-1/2"	19.00 D
B200D	2"	23.13 D
300200D	3" x 2" FPT	34.38 D
B300D	3"	38.85 D
B400D	4"	76.98 D

FEMALE COUPLER X FPT "90D"		
PART #	DESCRIPTION	PRICE
150D90	1-1/2"	27.30 D
200D90	2"	28.18 D

MALE ADAPTER X BARB "E"		
PART #	DESCRIPTION	PRICE
B12E	3/4" x 1/2" HS	6.68 D
B34E	3/4"	6.68 D
B100E	1"	7.40 D
B100E114	1" X 1-1/4" HS	7.40 D
B114E	1-1/2" x 1-1/4" HS	8.90 D
B112E	1-1/2"	7.43 D
B200E	2"	9.73 D
B300E	3"	25.55 D
B400E	4"	36.50 D

MALE ADAPTER X MPT "F"		
PART #	DESCRIPTION	PRICE
B12F	3/4" x 1/2" MPT	6.68 D
B34F	3/4"	6.68 D
B100F	1"	7.40 D
B100F114	1" X 1-1/4" MPT	7.40 D
B114F	1-1/2" x 1-1/4" MPT	8.90 D
B112F	1-1/2"	7.43 D
B200F	2"	9.73 D
B300F	3"	25.55 D
300200F	2" x 3" MPT	15.87 D
B400F	4"	36.50 D

MALE ADAPTER X MPT "45F"		
PART #	DESCRIPTION	PRICE
200F45	2"	26.68 D

MALE ADAPTER X MPT "90F"		
PART #	DESCRIPTION	PRICE
150F90	1-1/2"	15.90 D
200F90	2"	14.20 D

SPOOL ADAPTER		
PART #	DESCRIPTION	PRICE
200FF	2"	24.85 D
300F200F	3" X 2"	61.05 D
300FF	3"	61.05 D

CAM LEVER PARTS		
PART #	GASKET	PRICE
034G	3/4" EPDM	1.15 D
100G	1" EPDM	1.15 D
100GV	1" VITON	7.92 D
150G	1-1/2" EPDM	1.15 D
150GV	1-1/2" VITON	7.92 D
150GXT	1-1/2" EPDM Thick	2.13 D
200G	2" EPDM	1.25 D
200GV	2" VITON	8.43 D
200GXT	2" EPDM Thick	2.70 D
300G	3" EPDM	1.70 D
300GV	3" VITON	21.06 D
300GXT	3" EPDM Thick	3.63 D
400G	4" EPDM	4.15 D
PART #	CAM ARM w/RING	PRICE
100K	1" & 1-1/4"	4.90 D
150(200)K	1-1/2" & 2"	6.63 D
300K	3"	9.38 D
PART #	PINS	PRICE
75P	1/2" & 3/4"	1.23 D
100P	1" & 1-1/4"	1.23 D
200P	1-1/2" & 2"	1.28 D
300P	3" & 4"	2.65 D
PART #	SHIMS	PRICE
034S	1/2" & 3/4"	1.45 D
100S	1"	1.45 D
112S	1-1/4" & 1-1/2"	2.84 D
200S	2"	1.39 D
300S	3"	2.39 D

90* SWEEP MALE ADAPTER X MPT		
PART#	PART #	PRICE
200FSW90	2"	15.47 D
300FSW90	3"	42.17 D

MANIFOLD FITTINGS

FLANGE X MALE ADAPTER		
SIZE	PART#	PRICE
1” X 1”	M100A	7.85 **D**
2” X 2”	M200A	10.50 **D**
2”FP X 2”	M220A	11.55 **D**
3” X 3”	M300A	22.35 **D**

FLANGE X MALE ADAPTER SWEEP		
SIZE	PART #	PRICE
2”FP	M220ASWP90	17.40 **D**
3”	M300ASWP90	87.70 **D**

FLANGE X HOSE BAR		
SIZE	PART #	PRICE
1” X 1/2”	M100050BRB	2.95 **D**
1” X 3/4”	M100075BRB	2.95 **D**
1” X 1”	M100BRB	2.95 **D**
1” X 1-1/4”	M100125BRB	2.95 **D**
2” X 1”	M200100BRB	6.45 **D**
2” X 1-1/4”	M200125BRB	6.70 **D**
2” X 1-1/2”	M200150BRB	5.88 **D**
2” X 2”	M200BRB	6.45 **D**
2”FP X 1”	M220100BRB	7.93 **D**
2”FP X 1-1/4”	M220125BRB	6.45 **D**
2”FP X 1-1/2”	M220150BRB	6.45 **D**
2”FP X 2”FP	M220BRB	5.88 **D**
3” X 2”	M300220BRB	19.83 **D**
3” X 3”	M300BRB	17.93 **D**

FLANGE X HB 45º		
SIZE	PART#	PRICE
1” X 1”	M100BRB45	17.68 **D**
2” X 1-1/2”	M200150BRB45	21.25 **D**
2” X 2”	M200BRB45	24.93 **D**
2”FP X 2”	M220BRB45	24.03 **D**
3” X 3”	M300BRB45	83.83 **D**

FLANGE X HB ELBOW 90º		
SIZE	PART#	PRICE
1” X 3/4”	M100075BRB90	3.58 **D**
1” X 1”	M100BRB90	3.58 **D**
1” X 1-1/4”	M100125BRB90	3.58 **D**
1” X 1-1/2”	M100150BRB90	21.58 **D**
2” X 1”	M200100BRB90	11.96 **D**
2” X 1-1/4”	M200125BRB90	11.95 **D**
2” X 1-1/2”	M200150BRB90	10.88 **D**
2” X 2”	M200BRB90	11.95 **D**
2”FP X 1-1/2”	M220150BRB90	11.95 **D**
2” FP X 2”	M220BRB90	11.95 **D**
3” X 2”	M300220BRB90	19.70 **D**
3” X 3”	M300BRB90	47.95 **D**

FLANGE X HOSE BARB SWEEP		
SIZE	PART #	PRICE
1”	M100BRBSWP90	12.53 **D**
1” w/gauge port	M100BRBSWPG90	18.75 **D**
1” X 1-1/4”	M100125BRBSWP90	12.50 **D**
2”FP	M220BRBSWP90	21.48 **D**
3”	M300BRBSWP90	52.71 **D**

FLANGED COUPLER / COUPLER W/PORT		
SIZE	PART#	PRICE
1” X 1”	M100CPG	7.25 **D**
2” X 2”	M200CPG	15.43 **D**
2” X 2”FP	M220CPG	17.35 **D**
2” X 2”FP X 3” w/port	M220CPG3G	44.75 **D**
2” X 2”FP X 6”	M220CPG6	24.40 **D**
3” X 3”FP	M300CPG	20.45 **D**
3” X 3”FP X 7”	M300CPG7	24.10 **D**
3” X 3”FP X 12”	M300CPG12	124.95 **D**

45º FLANGED COUPLING		
SIZE	PART#	PRICE
1” X 1”	M100CPG45	13.40 **D**
2” X 2”	M200CGP45	15.78 **D**
2” X 2”FP	M220CPG45	19.03 **D**
3” X 3”FP	M300CPG45	77.83 **D**

90º FLANGED COUPLING		
SIZE	PART#	PRICE
1” X 1”	M100CPG90	9.00 **D**
2” X 2”	M200CPG90	15.08 **D**
2” X 2”SH	M200CPG90SH	15.08 **D**
2” X 2”FP	M220CPG90	13.70 **D**
3” X 3”FP	M300CPG90	65.05 **D**

MANIFOLD FITTINGS

FLANGE REDUCER COUPLER		
SIZE	PART#	PRICE
2” X 1”	M200100CPG	17.53 **D**
2”FP X 1”	M220100CPG	19.30 **D**
2”FP X 2”	M220200CPG	19.30 **D**
3” X 2”	M300200CPG	45.00 **D**
3” X 2”FP	M300220CPG	40.90 **D**

FLANGE X FEMALE PIPE		
SIZE	PART#	PRICE
1” X 1/2”	M100050FPT	3.05 **D**
1” X 3/4”	M100075FPT	3.05 **D**
1” X 1”	M100FPT	5.70 **D**
2” X 2”	M200FPT	16.53 **D**
2”FP X 2”	M220FPT	26.63 **D**
3” X 3”	M300FPT	42.90 **D**

FLANGE X MALE THREAD		
SIZE	PART#	PRICE
1” X 3/4”	M100075MPT	3.40 **D**
1” X 1”	M100MPT	3.40 **D**
1” X 1-1/4”	M100125MPT	3.40 **D**
2” X 1-1/4”	M200125MPT	5.70 **D**
2” X 1-1/2”	M200150MPT	5.70 **D**
2” X 2”	M200MPT	5.70 **D**
2”FP X 2”	M220MPT	5.70 **D**
3” X 3”	M300MPT	15.85 **D**

FLANGED CROSS		
SIZE	PART#	PRICE
1”	M100CR	23.40 **D**
2”	M200CR	39.63 **D**
2”FP	M220CR	43.58 **D**
3”	M300CR	87.63 **D**

FLANGE X PVC GLUE SOCKET		
SIZE	PART#	PRICE
2”FP X 2”	M221GSA	17.48 **D**
3”FP X 3”	M301GSA	27.43 **D**

FLANGE X MALE NPT -SS		
SIZE	PART#	PRICE
1” X 1”	M100MPTSS	34.33 **D**
2” X 1-1/4”	M200125MPTSS	58.80 **D**
2” X 1-1/2”	M200150MPTSS	53.90 **D**
2” X 2”	M200MPTSS	74.90 **D**
2”FP X 1-1/2”	M220150MPTSS	78.25 **D**
2”FP X 2”	M220MPTSS	77.55 **D**
3” X 2”FP	M300220MPTSS	213.53 **D**
3” X 3”	M300MPTSS	134.43 **D**

FLANGE X FEMALE QDC		
SIZE	PART#	PRICE
2”FP	M220D	26.48 **D**
3”FP	M303D	50.83 **D**

FLANGE X HB TEE		
SIZE	PART#	PRICE
1” X 1”	M100100HBT	10.30 **D**
1” X 1-1/4”	M100125HBT	12.32 **D**
2”FP X 2”	M220200HBT	19.10 **D**
2”FP X 3”	M220300HBT	**37.60 D**
3” X 3”	M300300HBT	41.60 **D**

FLANGE X MPT SWEEP		
SIZE	PART #	PRICE
2”FP	M220MPTSWP90	19.10 **D**
3”	M300MPTSWP90	52.71 **D**

MANIFOLD FITTINGS

FLANGED CHECK VALVE		
SIZE	PART#	PRICE
1”	MCV100	23.35 **D**
2”	MCV200	30.23 **D**
2”FP	MCV221	39.75 **D**
3”	MCV300	60.50 **D**

1” Manifold Pressure Spike Valves		
PART#	PRESSURE	PRICE
MPRV100-100	100 PSI	98.10 **D**
MPRV100-125	125 PSI	98.10 **D**

MANIFOLD SWIVEL		
SIZE	PART #	PRICE
2”FP	MSW220	48.28 **D**

PLUG W & W/O GAUGE PORT		
SIZE	PART#	PRICE
1”	M100PLG	3.40 **D**
2”	M200PLG	5.70 **D**
2”FP	M220PLG	7.23 **D**
3”	M300PLG	19.30 **D**
1” W-1/4”	M100PLG025	13.35 **D**
2” W-1/4”	M200PLG025	17.25 **D**
2” W-3/8”	M200PLG038	18.88 **D**
2” W-1/2”	M200PLG050	17.25 **D**
2” W-3/4”	M200PLG075	17.25 **D**
2” W-1”	M200PLG100	17.25 **D**
2”FP W-3/4”	M220PLG075	26.30 **D**
3” W-3/4”	M300PLG075	31.20 **D**
3” W-1”	M300PLG100	32.15 **D**

FLANGE X SOCKET WELD -SS		
SIZE	PART#	PRICE
1” X 1”	M100SWFSS	34.35 **D**
2” X 2”	M200SWFSS	94.48 **D**
2”FP X 2”	M220SWFSS	91.70 **D**
2”FP X 2” X 3-3/4”	M220375SWFSS	160.03 **D**
3” X 3”	M300SWFSS	154.18 **D**
3” X 3” X 3-3/4”	M300375SWFSS	262.73 **D**

FLANGE X FLANGE SWEEP		
SIZE	PART#	PRICE
1”	M100SWP90	12.53 **D**
1” w/port	M100SWPG90	20.63 **D**
2”	M200SWP90	18.85 **D**
2”FP x 2”	M220SWP90	17.00 **D**
2”FP w/port	M220SWPG90	20.05 **D**
2”FP x 2”	M220200SWP90	20.33 **D**
3” x 2” FP	M300220SWP90	79.73 **D**
3”	M300SWP90	52.71 **D**

FLANGED TEE		
SIZE	PART#	PRICE
1”	M100TEE	8.28 **D**
2” X 1”	M200100TEE	16.70 **D**
2”	M200TEE	15.85 **D**
2”FP X 1”	M220100TEE	17.65 **D**
2”FP X 2”	M220200TEE	27.33 **D**
2”FP	M220TEE	15.85 **D**
3”	M300TEE	74.68 **D**

MANIFOLD FITTINGS

3" MANIFOLD Y		
SIZE	PART #	PRICE
3" FP x 2"FP	M300220WYCG	118.03 **D**

FLANGED "Y" COUPLER		
SIZE	PART#	PRICE
2"FP	M220Y45	77.10 **D**
2"FP w/port	M220YG45	91.93 **D**
3"FP	M300Y45	154.43 **D**
3"FP w/port	M300YG45	161.38 **D**

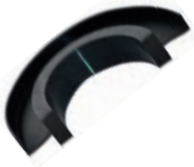

GASKET FLANGE		
SIZE	PART #	PRICE
1"	FG100	2.16 **D**
1-1/2"	FG200	2.31 **D**
2"FP	FG220	2.36 **D**
3"	FG300	3.37 **D**

FLANGE CLAMPS		
SIZE	PART#	PRICE
1"	FC100	6.95 **D**
2"	FC200	8.55 **D**
2"FP	FC220	8.75 **D**
3"	FC300	10.58 **D**

BOLTED FLANGE CLAMPS		
SIZE	PART#	PRICE
2"FP	FC220B	55.88 **D**
3"	FC300B	62.95 **D**

T-BOLT FLANGE CLAMPS		
SIZE	PART#	PRICE
2"FP	FC220TB	22.75 **D**
3"	FC300TB	22.50 **D**

GASKETS RIB		
SIZE	PART#	PRICE
1"	M101G	2.08 **D**
2"	M201G	2.43 **D**
2"FP	M221G	2.60 **D**
3"	M301G	2.88 **D**

U-BOLTS		
SIZE	PART#	PRICE
100 SERIES	UB100	28.88 **D**
200 SERIES	UB202	28.88 **D**
220 SERIES	UB220	30.50 **D**

MANIFOLD FITTINGS & BOOM NOZZLE ADAPTER

FLANGE FLOW METER		
SIZE	PART #	PRICE
1”	MFM100	978.43 **D**
2” FP	MFM220	1,111.74 **D**
3” FP	MFM300	1,395.27 **D**

FLOW METER

***Displays overall total volume & batch total volume**
***Flow rate allows for Gallons or Liters Per Minute**
***Self calibrating meter**
***Measures water & most conductive liquids**
***No moving parts to fail during use**
***Magnetic style meter with stainless steel electrodes**

VENTURI		
PART#	DESCRIPTION	PRICE
MHV200	2” Manifold Poly Venturi 1-1/2” Port	153.73 **A**
MHV220A	2”FP Manifold Poly Venturi	154.48 **A**

BOOM NOZZLE PIPE ADAPTER		
PART#	DESCRIPTION	PRICE
M100PA	1” Flanged Pipe Adapter	57.20 **D**
M100PAT	1” Flanged Pipe Adapter Tee	63.60 **D**
M100PAC	1” Flanged Pipe Adapter Cap	59.45 **D**

MANIFOLD INDUCTOR SYSTEM		
PART#	DESCRIPTION	PRICE
MIS220	2” FP Flange x Flange - Assembled	472.29 **A**
MIS300	3” FP Flange x Flange - Assembled	904.95 **A**

MANIFOLD VALVES

4 & 6 BOLT MANIFOLD VALVES

4 & 6 Bolt Manifold Valves				
PART#	DESCRIPTION	PIPE SIZE	OPENING	PRICE
MV100CF	1" x 1" Flange Ball Valve	1"	1"	53.33 **D**
MV200CF	2" x 2" Flange Ball Valve	2"	1-1/2"	73.45 **D**
MV220CF	2" x 2"FP Flange Ball Valve	2"	2"	97.88 **D**
MV300	3" x 3" Flange Ball Valve	3"	2-1/2"	160.70 **D**
MV300CF	3" x 3"FP Flange Ball Valve	3"	3"	209.61 **D**

MANIFOLD "STUBBY" VALVES

Manifold Stubby Valves				
PART#	DESCRIPTION	SIZE	OPENING	PRICE
VSMT200CF	2" Flange x 2" Male NPT	2"	1-1/2"	87.90 **D**
VSF200CF	2" Flange x 2" Male Adapter	2"	1-1/2"	75.45 **D**
MVS220FP	2"FP Flange x 2" Female NPT	2"	2"	109.30 **D**
MVSF220FP	2"FP Flange x 2" Male Adapter	2"	2"	91.10 **D**
MVS220CF	2"FP Flange x 2"FP Flange	2"	2"	91.10 **D**
MVSMT220FP	2"FP Flange x 2" Male NPT	2"	2"	91.10 **D**
MVSF300	3" Flange x 3" Male Adpater	3"	2-1/2"	181.20 **D**
MVSF300FP	3"FP Flange x 3" Male Adapter	3"	3"	226.85 **D**
MVSMT300	3" Flange x 3" Male NPT	3"	2-1/2"	209.39 **D**
MVS300CF	3" Flange x 3" Flange	3"	2-1/2"	181.20 **D**
MVS300CFFP	3"FP Flange x 3"FP Flange	3"	3"	199.51 **D**

MANIFOLD "STUBBY" VALVES "STAINLESS STEEL"

SS Manifold Valves				
PART#	DESCRIPTION	PIPE SIZE	OPENING	PRICE
MVS220HSFP	2" FP Flange x 2" FP Flange	2"	2"	232.70 **D**
MVSF220HSFP	2" FP Flange x 2" Male NPT	2"	2"	210.89 **D**
MVSMT220HSFP	2"FP NPT x 2" Male Flange	2"	2"	202.88 **D**
MVS300HSFP	3" FP Flange x 3" FP Flange	3"	3"	436.13 **D**
MVSF300HSFP	3" FP Flange x 3" Male Adapter	3"	3"	395.20 **D**
MVSMT300HSFP	3" FP Flange x 3" Male NPT	3"	3"	436.13 **D**

BOTTOM & SIDE LOAD VALVES

3-Way Manifold Ball Valves				
PART#	DESCRIPTION	FLANGE SIZE	OPENING	PRICE
MV100BL	1" Flange Bottom Load	1"	1"	83.93 **D**
MV200BL	2" Flange Bottom Load	2"	1-1/2"	96.10 **D**
MV220BL	2"FP Flange Bottom Load	2"	2"	139.13 **D**
MV300BL	3" Flange Bottom Load	3"	3"	372.93 **D**
MV100SL	1" Flange Side Load	1"	1"	83.93 **D**
MV200SL	2" Flange Side Load	2"	1-1/2"	108.53 **D**
MV220SL	2"FP Flange Side Load	2"	2"	139.13 **D**

MANIFOLD STRAINERS

1” & 1-1/2” T STRAINER

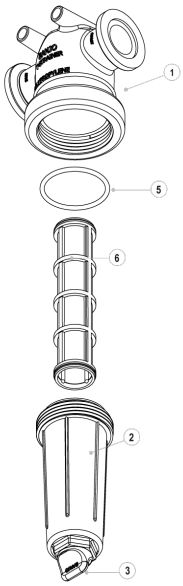

1” & 1-1/2” MANIFOLD T STRAINER				
PART #	SIZE	MESH	MAX PSI	PRICE
MLST100-30	1”	30	300	56.45 **D**
MLST100-50	1”	50	300	56.45 **D**
MLST100-80	1”	80	300	56.45 **D**
MLST100-100	1”	100	300	56.45 **D**
MLST150-30	2”	30	250	105.13 **D**
MLST150-50	2”	50	250	95.58 **D**
MLST150-80	2”	80	250	105.13 **D**
MLST150-100	2”	100	250	105.13 **D**

MANIFOLD 1” T REPLACEMENT PARTS			
ITEM	PART #	DESCRIPTION	PRICE
1	MLST100-H	1” T Head	20.03 **D**
2	BLST100-B	1” T Bowl, Drain Plug, O-ring	19.10 **D**
3	12777	1/2” Plug	3.65 **D**
4	UV15163	O-ring	1.28 **D**
5	BLST100-G	1” EPDM Gasket	4.95 **D**
6	BLST116	16 Mesh Screen BROWN RED	27.88 **D**
6	BLST130	30 Mesh Screen FLAME RED	27.88 **D**
6	BLST150	50 Mesh Screen GENTIAN BLUE	25.38 **D**
6	BLST180	80 Mesh Screen Zinc Yellow	25.35 **D**
6	BLST1100	100 Mesh Screen TRAFFIC GREEN	27.23 **D**
KIT	MLST100-HB	Kit Includes Items 1-5	37.28 **D**

MANIFOLD 1-1/2” T REPLACEMENT PARTS			
ITEM	PART #	DESCRIPTION	PRICE
1	MLST150-H	1-1/2” T Body	39.43 **D**
2	BLST150-B	2” T Bowl, Drain Plug, O-ring	31.33 **D**
3	BLSQ200-PL	1-1/2” Plug	4.25 **D**
4	BLSQ200-R	O-ring	1.33 **D**
5	BLST150-G	1-1/2” EPDM Gasket	4.95 **D**
6	BLST1516	16 Mesh Screen BROWN RED	42.83 **D**
6	BLST1530	30 Mesh Screen FLAME RED	42.83 **D**
6	BLST1550	50 Mesh Screen GENTIAN BLUE	42.83 **D**
6	BLST1580	80 Mesh Screen ZINC YELLOW	42.83 **D**
6	BLST15100	100 Mesh Screen TRAFFIC GREEN	42.83 **D**
KIT	MLST150-HB	kit Includes Items 1-5	70.28 **D**

MANIFOLD STRAINERS

2” Y STRAINER

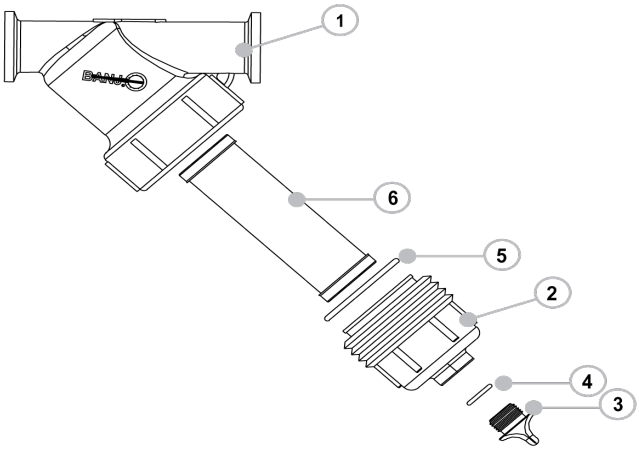

2” MANIFOLD “Y” STRAINER				
PART #	SIZE	MESH	MAX PSI	PRICE
MLS200-06	2”	6	225	120.80 **D**
MLS200-12	2”	12	225	120.80 **D**
MLS200-20	2”	20	225	120.80 **D**
MLS200-30	2”	30	225	109.83 **D**
MLS200-50	2”	50	225	120.80 **D**
MLS200-80	2”	80	225	120.80 **D**

2” REPLACEMENT PARTS			
ITEM	PART #	DESCRIPTION	PRICE
1	MLS200B	2” Y Body	53.93 **D**
2	BLS150-C	Bowl, Drain Plug, O-ring	33.23 **D**
3	BLSQ200-PL	2” Plug	4.25 **D**
4	BLSQ200-R	O-ring	1.33 **D**
5	BLS150-G	2” EPDM Gasket	4.95 **D**
6	BLS206	6 Mesh Screen WHITE	63.25 **D**
6	BLS212	12 Mesh Screen BLACK	57.48 **D**
6	BLS220	20 Mesh Screen BEIGE	57.48 **D**
6	BLS230	30 Mesh Screen FLAME RED	58.48 **D**
6	BLS250	50 Mesh Screen GENTIAN BLUE	58.48 **D**
6	BLS280	80 Mesh Screen ZINC YELLOW	58.48 **D**
6	BLS2100	100 Mesh Screen TRAFFIC GREEN	63.25 **D**
6	BLS2120	120 Mesh Screen BLACK	63.25 **D**
KIT	MLS200BC	Kit Includes Items 1-5	65.75 **D**

MANIFOLD STRAINERS

2” FULL PORT Y STRAINER

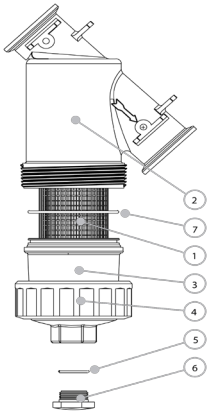

2” FP MANIFOLD Y STRAINER				
PART #	SIZE	MESH	MAX PSI	PRICE
MLS222-04	2” FP	4	225	167.63 **D**
MLS222-10	2” FP	10	225	184.40 **D**
MLS222-16	2” FP	16	225	184.40 **D**
MLS222-30	2” FP	30	225	167.63 **D**
MLS222-50	2” FP	50	225	167.63 **D**
MLS222-80	2” FP	80	225	184.40 **D**

MANIFOLD 2” FP REPLACEMENT PARTS			
ITEM	PART #	DESCRIPTION	PRICE
1	BLST210SS	10 SS Mesh Screen	87.00 **D**
1	BLST216SS	16SS Mesh Screen	87.00 **D**
1	BLST230SS	30 SS Mesh Screen	79.00 **D**
1	BLST250SS	50 SS Mesh Screen	79.00 **D**
1	MLS250SS	50 SS Mesh Perforated Screen	126.03 **D**
1	BLST280SS	80 SS Mesh Screen	87.00 **D**
1	MLS280SS	80 SS Mesh Perforated Screen	126.03 **D**
1	BLST2100SS	100 SS Mesh Screen	87.00 **D**
2	MLS222B	2” Flanged Y Strainer Body	56.38 **D**
3	MLS220C1	2” Flanged Y Strainer Cap	37.28 **D**
4	MLS220R1	2” Flanged Y Strainer Ring	21.03 **D**
5	BLSQ200-R	2” Plug Gasket	1.33 **D**
6	BLSQ200-PL	2” Plug	4.25 **D**
7	MLS220G1	2” Body Gasket	5.45 **D**
KIT	MLS222BC	Kit Includes Items 2-7	101.68 **D**

3” Y STRAINER

3” MANIFOLD Y STRAINER				
PART #	SIZE	MESH	MAX PSI	PRICE
MLS300-12	3”	12	100	606.69 **D**
MLS300-20	3”	20	100	551.57 **D**
MLS300-50	3”	50	100	551.57 **D**

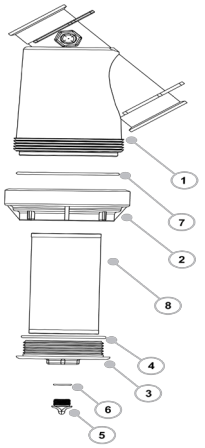

3” FLANGED Y STRAINER REPLACEMENT PARTS			
ITEM	PART #	DESCRIPTION	PRICE
1	MLS300B1	3” Flanged Y Strainer Body	418.98 **D**
2	MLS300CAP	3” Flanged Y Strainer Cap	230.45 **D**
3	BLS300EC	3” End Cap	43.35 **D**
4	MLS300ECG	3” EPDM End Cap Gasket	17.50 **D**
5	13777	3/4” Plug	5.70 **D**
6	13778	O-ring	2.43 **D**
7	MLS300G	3” EPDM Cap Gasket	9.05 **D**
8	BLS308	8 SS Mesh Screen	190.03 **D**
8	BLS312	12 SS Mesh Screen	190.03 **D**
8	BLS320	20 SS Mesh Screen	172.98 **D**
8	BLS350	50 SS Mesh Screen	172.98 **D**
KIT	MLS300BC	Kit Includes Items 1-7	500.18 **D**

***WARNING: 3” “Y” Strainer to be used on suction side or non-pressure side in all applications.**

(866)775-8089
FAX (701)775-8217

SINGLE UNION VALVE

SINGLE UNION POLY BALL VALVE			
PART#	THREAD SIZE	PORT SIZE	PRICE
UV12	1/2”	1/2”	19.98 **D**
UV34	3/4”	3/4”	23.35 **D**
UV100	1”	1”	28.19 **D**
UV114	1-1/4”	1-1/4”	46.24 **D**
UV112	1-1/2”	1-1/2”	57.74 **D**
UV200	2”	2”	75.51 **D**
UV300	3”	3”	217.32 **D**
SINGLE UNION NOZZLE STYLE			
PART#	THREAD SIZE	PORT SIZE	PRICE
UV100-45	1”	1”	29.38 **D**

MULTI-PORT VALVE

TRUE-UNION MULTI-PORT BALL VALVE			
PART#	THREAD SIZE	PORT SIZE	PRICE
UV34MP	3/4”	3/4”	64.27 **D**
SINGLE UNION MULTI-PORT BALL VALVE			
PART#	THREAD SIZE	PORT SIZE	PRICE
UV200MP	2”	2”	91.07 **D**

BALL VALVES

4-BOLT POLY BALL VALVE

4-BOLT POLY BALL VALVE			
PART#	THREAD SIZE	PORT SIZE	PRICE
60540	1/2”	1/2”	43.52 D
60541	3/4”	3/4”	43.52 D
60543	1”	1”	50.98 D
60527	1-1/4”	1-1/4”	64.30 D
60526	1-1/2”	1-1/2”	64.30 D
62046	2” Male x 2” Female	1-1/2”	65.05 D

6-BOLT POLY BALL VALVE

6-BOLT POLY VALVE			
PART#	THREAD SIZE	PORT SIZE	PRICE
60528	2”	2”	91.69 D
61720	3”	3”	217.03 D
62787	4”	4”	463.13 D

6-BOLT MALE X FEMALE

6-BOLT FULL PORT MALE X FEMALE POLY BALL VALVE			
PART#	THREAD SIZE	PORT SIZE	PRICE
61876	2”	2”	91.69 D
62047	3”	3”	217.03 D

6-BOLT NOZZLE STYLE

6-BOLT NOZZLE STYLE POLY BALL VALE			
PART#	THREAD SIZE	PORT SIZE	PRICE
60544	1-1/2” FULL	1-1/2”	87.96 D
60545	2”	1-1/2”	90.06 D
60546	2” FULL	2”	125.38 D

COMPACT BALL VALVES

COMPACT BOLTED VALVE FP MALE X FEMALE			
PART#	THREAD SIZE	PORT SIZE	PRICE
62286	2”	2”	73.21 D
COMPACT BOLTED VALVE FP FEMALE X FEMALE			
62287	2”	2”	73.21 D
COMPACT BOLTED VALVE FP FEMALE X MALE ADAPTER			
62314	2”	2”	73.21 D
COMPACT BOLTED VALVE FP MALE X MALE ADAPTER			
62288	2”	2”	73.21 D

6 BOLT VSVALVES

HOSE BARB x FEMALE COUPLER VALVE		
PART #	**Description**	**Price**
VSHBD204FP	2” Hose Barb x 2” Female Coupler Full Port	100.80 **D**
VSHBD300FP	3” Hose Barb x 3” Female Coupler Full Port	215.94 **D**

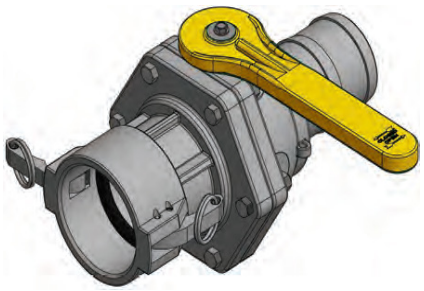

FLANGE x FEMALE COUPLER VALVE		
PART #	**Description**	**Price**
MVSD220FP	2” Flange x 2” Female Coupler Full Port	100.80 **D**
MVSD300FP	3” Flange x 3” Female Coupler Full Port	215.94 **D**

METAL VALVE HANDLE Fits V125FP, V150, V200, V300, V300FP	
PART #	**PRICE**
V25272	31.72 **D**

VSFHB204FP $80.34 **D**
2” Male Cam Adapter x 2” Hose Barb

VSFHB300FP $187.11 **D**
3” Male Cam Adapter x 3” Hose Barb

VA200FP $120.15 **D**
2” FP Nozzle Valve w 90* Sweep

200CSWP90 $30.71 **D**
2” Female Coupler x 2” Hose Barb Sweep

M220300HBT $37.60 **D**
2” FP Flange x 3” Hose Barb Tee

EASY-FILL VALVES			
PART#	**DESCRIPTION**	**MAX PSI**	**PRICE**
VSBHB204FP	2” FP EASY-FILL VALVE	150	116.08 **D**
VSBHB205FP	2” FP EASY-FILL VALVE W/CARRY HANDLE	150	141.60 **D**
VSBHB304FP	3” FP EASY-FILL VALVE	100	275.35 **D**
VSBHB305FP	3” FP EASY-FILL VALVE W/CARRY HANDLE	100	300.88 **D**
H25053	2” & 3” CARRY HANDLE		25.98 **D**

(866)775-8089
FAX (701)775-8217

BOLTED VALVES

4-BOLT POLY VALVE			
PART#	THREAD SIZE	PORT SIZE	PRICE
BBV050	1/2”	3/4”	48.38 D
BBV075	3/4”	3/4”	48.38 D
BBV100FP	1”	1”	53.33 D
BBV125FP	1-1/4”	1-1/4”	64.10 D
BBV150FP	1-1/2”	1-1/2”	68.53 D
BBV204FP	2”	2”	89.08 D

6-BOLT POLY VALVE			
PART#	THREAD SIZE	PORT SIZE	PRICE
BBV200FP	2”	2-1/16”	93.93 D
BBV300FP	3”	3”	202.03 D
BBV400	4”	3-1/2”	490.60 D

BOLTED POLY NOZZLE VALVE			
PART#	THREAD SIZE	PORT SIZE	PRICE
VA150	1-1/2”	1-1/2”	82.53 D
VA200	2”	1-1/2”	82.53 D
VA200FP	2”	2-1/16”	120.15 D

“STUBBY” VALVES

“STUBBY” BALL VALVE & 2” FULL PORT ADAPTER VALVE			
PART#	DESCRIPTION	PORT SIZE	PRICE
VSMT204FP	2” MPT x 2” FPT	2”	91.10 D
VSF204FP	2” MALE ADAPTER x 2” FPT	2”	91.10 D
VSFMT204FP	2” MALE ADAPTER x 2” MPT	2”	91.10 D
VS204FP	2” FPT x 2” FPT	2”	91.10 D

STAINLESS STEEL STRAINER SCREENS

T - STRAINER SCREEN			
Part#	**SIZE**	**Mesh**	**Price**
LST130SS	3/4” & 1”	30	27.55 **D**
LST150SS	3/4” & 1”	50	27.55 **D**
LST180SS	3/4” & 1”	80	27.55 **D**
LST1100SS	3/4” & 1”	100	29.59 **D**
LST1530SS	1-1/2” & 2”	30	45.97 **D**
LST1550SS	1-1/2” & 2”	50	45.97 **D**
LST1580SS	1-1/2” & 2”	80	45.97 **D**
LST15100SS	1-1/2” & 2”	100	45.97 **D**

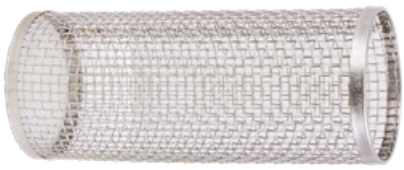

Y - STRAINER SCREEN			
LS720SS	1/2” & 3/4”	20	34.74 **D**
LS740SS	1/2” & 3/4”	40	34.74 **D**
LS780SS	1/2” & 3/4”	80	34.74 **D**
LS120SS	1” & 1-1/4”	20	34.74 **D**
LS140SS	1” & 1-1/4”	40	34.74 **D**
LS180SS	1” & 1-1/4”	80	34.74 **D**
LS212SS	1-1/2” & 2”	12	62.66 **D**
LS220SS	1-1/2” & 2”	20	62.66 **D**
LS230SS	1-1/2” & 2”	30	62.66 **D**
LS250SS	1-1/2” & 2”	50	62.66 **D**
LS280SS	1-1/2” & 2”	80	62.66 **D**

Interchangeable with other brands

(866)775-8089
FAX (701)775-8217

3-WAY BALL VALVE & REPLACEMENT PARTS

BOTTOM LOAD:
DIRECTIONAL FLOW, RIGHT OR LEFT AND CAN BE TURNED OFF

SIDE LOAD:
DIRECTIONAL FLOW, RIGHT OR LEFT AND CANNOT BE TURNED OFF

BANJO 3-WAY VALVES FEATURE:
- **PRECISION MOLDED IN GLASS REINFORCED POLYPROPYLENE**
- **PTFE BUSHINGS & SEATS**
- **BALL IS DIAMOND TURNED AFTER MOLDING**
- **STAINLESS STEEL BOLTS**

3-WAY BOTTOM LOAD			
PART#	THREAD SIZE	PORT SIZE	PRICE
BBV075BL	3/4”	1”	69.85 D
BBV100BL	1”	1”	69.85 D
BBV125BL	1-1/4”	1-1/2”	108.53 D
BBV150BL	1-1/2”	1-1/2”	108.53 D
BBV200BL	2”	2”	134.10 D

3-WAY SIDE LOAD			
PART#	THREAD SIZE	PORT SIZE	PRICE
BBV075SL	3/4”	1”	69.85 D
BBV100SL	1”	1”	69.85 D
BBV125SL	1-1/4”	1-1/2”	108.53 D
BBV150SL	1-1/2”	1-1/2”	108.53 D
BBV200SL	2”	2”	134.10 D

3-WAY BALL VALVE REPLACEMENT PARTS										
ITEM	SIZE AND DESCRIPTION									
VALVE	075BL	075SL	100BL	100SL	125BL	125SL	150BL	150SL	200BL	200SL
	VALVE BODY									
PART#	V07354B									V25354S
PRICE										23.40 D
	END PLATE									
PART#	V07357	V07357	V10257	V10257			V20257	V20257	V25356	V25356
PRICE			16.18 D	16.18 D			18.58 D	18.58 D	25.80 D	25.80 D
	STEM									
PART#	V10151A	V10151A	V10151A	V10151A	V20151M	V20151M	V20151M	V20151M	V25151B	V25151B
PRICE	5.85 D	5.85 D	5.05 D	5.05 D	11.38 D	11.38 D	11.38 D	11.38 D		
	HANDLE									
PART#	V10353TB	V10153A	V10353TB	V10153A	V10353TB	V20153	V10353TB	V20153	V25353B	V25153SH
PRICE	6.65 D	6.18 D	6.65 D	6.18 D	6.65 D	11.38 D	6.65 D	11.38 D	18.58 D	18.58 D
	BALL									
PART#	V10355B	V10355S	V10355B	V10355S	V20355B	V20355S	V20355B	V20355S	V25355B	V25355S
PRICE	10.20 D	10.20 D	10.20 D	10.20 D	17.40 D	17.40 D	17.40 D	17.40 D	22.18 D	22.18 D
	BALL SEATS									
PART#	V10258	V10258	V10258	V10258					V25258	V25258
PRICE	8.95 D	8.95 D	8.95 D	8.95 D					17.30 D	17.30 D
	THRUST BUSHING									
PART#	V10060	V10060	V10060	V10060	V20060	V20060	V20060	V20060	V25060	V25060
PRICE	2.03 D	2.03 S	2.03 S	2.03 D	2.75 D	2.75 D	2.75 D	2.75 D	2.63 D	2.63 D
	STEM BUSHING									
PART#	V10159	V10159	V10159	V10159	V20159	V20159	V20159	V20159	V25160	V25160
PRICE	3.35 D	3.35 D	3.35 D	3.35 D	4.90 D	4.90 D	4.90 D	4.90 D	5.82 D	5.82 D
	STEM O-RING									
PART#					V20163	V20163	V20163	V20163	V25163	V25163
PRICE					3.48 D	3.48 D	3.48 D	3.48 D	4.68 D	4.68 D
	VALVE BODY O-RING									
PART#	V10264	V10264	V10264	V10264	V20264	V20264	V20264	V20264	V25264	V25264
PRICE	9.88 D	9.88 D	9.88 D	9.88 D	12.53 D	12.53 D	12.53 D	12.53 D	14.27 D	14.27 D

SINGLE UNION VALVE

FEATURES:

* Glass reinforced polypropylene for strength & resistance
* EPDM O-rings handle fertilizers & chemicals
* Maximum operating pressure 100 P.S.I. at 70*F
* PTFE seats for smooth operation & sealing
* Double O-rings in stem for extra sealing

SINGLE UNION POLY BALL VALVE				
PART#	DESCRIPTION	THREAD SIZE	PORT SIZE	PRICE
BUV050FP	1/2" UNION VALVE	1/2"	1/2"	21.89 D
BUV075FP	3/4" UNION VALVE	3/4"	3/4"	21.89 D
BUV100FP	1" UNION VALVE	1"	1"	25.45 D
MSUV100FP	1" MANIFOLD UNION VALVE	1"	1"	29.48 D
BUV125FP	1-1/4" UNION VALVE	1-1/4"	1-1/4"	45.47 D
BUV150FP	1-1/2" UNION VALVE	1-1/2"	1-1/2"	46.67 D
BUV200FP	2" UNION VALVE	2"	2"	58.63 D

POLY MICRO VALVE

HOSEBARB MICRO VALE		
PART#	DESCRIPTION	PRICE
LVHB38V	3/8" Hosebarb	28.55 D
LVHB12V	1/2" Hosebarb	28.55 D
LVHB34V	3/4" Hosebarb	28.55 D

MICRO HOSEBARB X MALE NPT		
PART#	DESCRIPTION	PRICE
LVHB3812MTV	3/8" Hosebarb x 1/2" Male NPT	28.55 D
LVHB34MTV	3/4" Hosebarb x 3/4" Male NPT	28.55 D
LVHB34100MTV	3/4" Hosebarb x 1" Male NPT	32.65 D

MICRO FEMALE NPT/MANIFOLD		
PART#	DESCRIPTION	PRICE
LV14V	1/4" Female NPT	28.55 D
LV38V	3/8" Female NPT	28.55 D
LV12V	1/2" Female NPT	28.55 D
LV12SLV	1/2" Side Load	38.83 D

MICRO FEMALE/MALE NPT		
PART#	DESCRIPTION	PRICE
LV14MTV	1/4" Female x Male NPT	28.55 D
LV38MTV	3/8" Female x Male NPT	28.55 D
LV3812MTV	3/8" Female x 1/2" Male NPT	28.55 D
LV12MTV	1/2" Female x Male NPT	28.55 D
LV12100MTV	1/2" Female x 1" Male NPT	32.65 D

LOCKING MICRO VALVES

MICRO VALVES W/LOCKING HANDLE		
PART#	DESCRIPTION	PRICE
LV3812MTLV	3/8" Female x 1/2" Male NPT	38.83 D
LV12SLLV	1/2" Side Load	50.45 D
LV12100MTLV	1/2" Female x 1" Male NPT	42.93 D
LVHB34100MTLV	3/4" Hose Barb x 1" Male NPT	42.93 D

(866)775-8089
FAX (701)775-8217

STAINLESS, BRASS& PVC CHECK VALVES

BRASS BALL VALVES
CHROME PLATED TO RESIST CORROSION
TEFLON SEATS & VITON SEALS
RATED AT 300 PSI
LEVER OR BUTTERFLY HANDLE

BRASS BALL VALVE		
PART#	DESCRIPTION	PRICE
90FFB18	1/8” FPT x 1/8” FPT	14.45 D
90FMB18	1/4” FPT x 1/4” MPT	14.45 D
90FFB14	1/4” FPT x 1/4” FPT	12.47 D
90FFL14	1/4” FPT x 1/4” FPT	12.47 D
90FMB14	1/4” FPT x 1/4” MPT	12.47 D
90FML14	1/4” FPT x 1/4” MPT	12.47 D
90FFB38	3/8” FPT x 3/8” FPT	12.47 D
90FFL38	3/8” FPT x 3/8” FPT	12.47 D
90FMB38	3/8” FPT x 3/8” MPT	12.47 D
90FML38	3/8” FPT x 3/8” MPT	12.47 D
90FFB12	1/2” FPT x 1/2” FPT	15.43 D
90FFL12	1/2” FPT x 1/2” FPT	15.43 D
90FMB12	1/2” FPT x 1/2” MPT	15.43 D
90FML12	1/2” FPT x 1/2” MPT	15.43 D
B=BUTTERFLY L-LEVER		

STAINLESS STEEL BALL VALVES
FULL PORT 316 STAINLESS STEEL
VALVE WITH LOCKING HANDLES
RATED AT 1000 PSI

STAINLESS STEEL BALL VALVE		
PART#	SIZE	PRICE
SSBV14	1/4”	36.43 D
SSBV38	3/8”	35.62 D
SSBV12	1/2”	38.68 D
SSBV34	3/4”	46.98 D
SSBV100	1”	71.73 D
SSBV114	1-1/4”	103.90 D
SSBV112	1-1/2”	141.20 D
SSBV200	2”	202.00 D
SSBV300	3”	530.00 D

FULL PORT BRASS BALL VALVES
CHROME PLATED BRASS BALL
TEFLON SEATS & SEALS
RATED AT 600 PSI

BRASS BALL VALVE		
PART#	SIZE	PRICE
BV14BR	1/4”	12.58 D
BV38BR	3/8”	12.02 D
BV12BR	1/2”	17.65 D
BV34BR	3/4”	22.91 D
BV100BR	1”	39.04 D
BV114BR	1-1/4”	70.02 D
BV112BR	1-1/2”	95.80 D
BV200BR	2”	121.57 D
BV300BR	3”	306.78 D

PVC CHECK VALVES

PVC CHECK VALVE			
PART#	INLET SIZE	OUTLET SIZE	PRICE
CV12	1/2” FPT	1/2” FPT	8.45 D
CV34	3/4” FPT	3/4” FPT	10.95 D
CV100	1” FPT	1” FPT	16.28 D
BCV100	1” FPT	1” FPT	28.68 D
CV114	1-1/4” FPT	1-1/4” FPT	18.38 D
CV112	1-1/2” FPT	1-1/2” FPT	22.50 D
CV200	2” FPT	2” FPT	27.58 D
BCV300	3” FPT	3” FPT	58.50 D
BCV301	3” FPT	3” FPT	57.65 D

PUSH-IN TUBING FITTINGS

1181 1182

CONNECTOR MODEL 1181		
PART#	SIZE	PRICE
1181	1/8”	5.44 A
UNION MODEL 1182		
PART#	SIZE	PRICE
1182	1/8”	7.86 A

HAND VALVE UNION			
PART#	Tube OD	Tube OD	PRICE
HVUC4	1/4”	1/4”	9.50 D
HVUC6	3/8”	3/8”	10.05 D
HVUC8	1/2”	1/2”	13.90 D

CROSS		
PART#	Tube OD	PRICE
JGCR6	3/8”	9.95 D

CHECK VALVE			
PART#	Tube OD	Tube OD	PRICE
JGCV4	1/4”	1/4”	17.68 D
JGCV5	5/16”	5/16”	17.68 D
JGCV6	3/8”	3/8”	18.10 D
JGCV8	1/2”	1/2”	19.05 D

FEMALE ADAPTER			
PART#	Tube OD	NPTF	PRICE
JGFC24	1/4”	1/8”	7.50 D
JGFC44	1/4”	1/4”	6.70 D
JGFC46	3/8”	1/4”	6.93 D
JGFC66	3/8”	3/8”	9.10 D

MALE CONNECTOR			
PART#	Tube OD	NPTF	PRICE
JGMC24	1/4”	1/8”	2.23 D
JGMC44	1/4”	1/4”	2.18 D
JGMC64	1/4”	3/8”	2.98 D
JGMC45	5/16”	1/4”	2.45 D
JGMC65	5/16”	3/8”	3.53 D
JGMC46	3/8”	1/4”	3.75 D
JGMC66	3/8”	3/8”	3.75 D
JGMC86	3/8”	1/2”	5.08 D
JGMC68	1/2”	3/8”	5.08 D
JGMC88	1/2”	1/2”	5.45 D

MALE ELBOW			
PART#	Tube OD	NPTF	PRICE
JGME24	1/4”	1/8”	2.95 D
JGME44	1/4”	1/4”	3.75 D
JGME64	1/4”	3/8”	4.03 D
JGME45	5/16”	1/4”	4.18 D
JGME65	5/16”	3/8”	5.65 D
JGME46	3/8”	1/4”	4.45 D
JGME66	3/8”	3/8”	4.58 D
JGME68	1/2”	3/8”	7.43 D

STEM ELBOW CONNECTOR		
PART#	Tube OD	PRICE
JGPE	3/8”	5.08 D

STEM TO REDUCER		
PART#	Tube OD	PRICE
JGRE64	3/8” to 1/4”	3.25 D

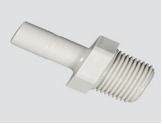

STEM ADAPTER			
PART#	Stem OD	NPTF	PRICE
JGSA24	1/4”	1/8”	1.28 D
JGSA44	1/4”	1/4”	1.15 D
JGSA45	5/16”	1/4”	1.08 D
JGSA65	5/16”	3/8”	1.85 D
JGSA46	3/8”	1/4”	1.25 D
JGSA66	3/8”	3/8”	1.70 D
JGSA68	1/2”	3/8”	2.93 D
JGSA88	1/2”	1/2”	2.63 D

TUBE BARB CONNECTOR			
PART#	Stem OD	Tube OD	PRICE
JGTBC44	1/4”	1/4”	2.00 D
JGTBC45	1/4”	5/16”	1.85 D
JGTBC54	5/16”	1/4”	2.25 D
JGTBC55	5/16”	5/16”	2.25 D
JGTBC56	5/16”	3/8”	2.85 D
JGTBC64	3/8”	1/4”	2.93 D
JGTBC66	3/8”	3/8”	3.15 D
JGTBC68	3/8”	1/2”	3.40 D
JGTBC86	1/2”	3/8”	4.28 D
JGTBC88	1/2”	1/2”	4.40 D

TUBE ELBOW BARB CONNECTOR			
PART#	Stem OD	Tube OD	PRICE
JGTEBC44	1/4”	1/4”	2.70 D
JGTEBC45	1/4”	5/16”	3.18 D
JGTEBC54	5/16”	1/4”	3.18 D
JGTEBC55	5/16”	5/16”	3.18 D
JGTEBC64	3/8”	1/4”	4.40 D
JGTEBC65	3/8”	5/16”	3.98 D

PUSH-IN TUBING FITTINGS

TUBE END STOP		
PART#	Tube OD	PRICE
JGTES4	1/4”	3.15 **D**
JGTES6	3/8”	2.63 **D**

TWO WAY DIVIDER			
PART#	Tube In	Tube Out	PRICE
JGTWD44	1/4”	1/4”	6.08 **D**
JGTWD55	5/16”	5/16”	5.15 **D**
JGTWD66	3/8”	3/8”	5.53 **D**
JGTWD88	1/2”	1/2”	9.78 **D**

TWO-WAY DIVIDER CONNECTOR		
PART#	Tube OD	PRICE
JGUD	3/8” inlet, 5/16 outlet	6.08 **D**

UNION CONNECTOR			
PART#	Tube OD	Tube OD	PRICE
JGUC44	1/4”	1/4”	2.93 **D**
JGUC45	5/16”	1/4”	3.48 **D**
JGUC55	5/16”	5/16”	3.38 **D**
JGUC46	3/8”	1/4”	4.05 **D**
JGUC56	3/8”	5/16”	4.35 **D**
JGUC66	3/8”	3/8”	3.95 **D**
JGUC68	1/2”	3/8”	5.45 **D**
JGUC88	1/2”	1/2”	4.93 **D**

ELBOW UNION			
PART#	Tube OD	Tube OD	PRICE
JGUL44	1/4”	1/4”	3.33 **D**
JGUL45	5/16”	1/4”	4.30 **D**
JGUL55	5/16”	5/16”	3.55 **D**
JGUL46	3/8”	1/4”	5.60 **D**
JGUL66	3/8”	3/8”	5.08 **D**
JGUL68	1/2”	3/8”	6.93 **D**
JGUL88	1/2”	1/2”	6.05 **D**

TEE UNION			
PART#	Run OD	Stem OD	PRICE
JGUT44	1/4”	1/4”	4.20 **D**
JGUT55	5/16”	5/16”	4.55 **D**
JGUT46	3/8”	1/4”	5.63 **D**
JGUT66	3/8”	3/8”	5.13 **D**
JGUT68	1/2”	3/8”	7.20 **D**
JGUT88	1/2”	1/2”	6.48 **D**

LINEAR GAUGE TUBING					
PART#	PRICE	DESCRIPTION	PART#	PRICE	DESCRIPTION
LGT14	0.28 **D**	1/4" **BLACK** per/Foot (135 PSI)	LGTC18	0.70 **D**	1/8" NATURAL per/Foot (PSI)
LGT14R	22.50 **D**	1/4" **BLACK** Roll 100'	LGTC18R	57.20 **D**	1/8" NATURAL Roll 100'
LGT14R5	112.50 **D**	1/4" **BLACK** Roll 500'	LGT38	0.60 **D**	3/8" **BLACK** per/Foot (120 PSI)
LGT14R1000	170.00 **D**	1/4" **BLACK** Roll 1,000'	LGT38R	55.00 **D**	3/8" **BLACK** Roll 100'
LGT14B	0.32 **D**	1/4" **BLUE** per/Foot (135 PSI)	LGT38R5	202.50 **D**	3/8" **BLACK** Roll 500'
LGT14BR	25.00 **D**	1/4" **BLUE** Roll 100'	LGTC38	0.60 **D**	3/8" NATURAL per/Foot (120 PSI)
LGT14BR5	122.00 **D**	1/4" **BLUE** Roll 500'	LGTC38R	55.00 **D**	3/8" NATURAL Roll 100'
LGT14G	0.32 **D**	1/4" **GREEN** per/Foot (135 PSI)	LGTC38R5	202.50 **D**	3/8" NATURAL Roll 500'
LGT14GR	25.00 **D**	1/4" **GREEN** Roll 100'	LGT12	0.60 **D**	1/2" **BLACK** per/Foot (90 PSI)
LGT14GR5	122.00 **D**	1/4" **GREEN** Roll 500'	LGT12R	55.00 **D**	1/2" **BLACK** Roll 100'
LGT14Y	0.32 **D**	1/4" **YELLOW** per/Foot (135 PSI)	LGTC12	0.60 **D**	1/2" NATURAL per/Foot (90 PSI)
LGT14YR	25.00 **D**	1/4" **YELLOW** Roll 100'	LGTC12R	55.00 **D**	1/2" NATURAL Roll 100'
LGT14YR5	122.00 **D**	1/4" **YELLOW** Roll 500'	LGTC12R5	202.50 **D**	1/2" NATURAL Roll 500'
LGTC14	0.32 **D**	1/4" NATURAL per/Foot (135 PSI)	CUTTER/REPLACEMENT BLADE		
LGTC14R	25.00 **D**	1/4" NATURAL Roll 100'	44103218	12.63 **Y**	Tube Cutter
LGTC14R5	122.00 **D**	1/4" NATURAL Roll 500'	44103219	3.72 **Y**	Replacement Blade

PART#	DESCRIPTION	PSI	SIZE	OPENING	PRICE
LVPL14V	1/4” Female NPT Micro Valve	150	1/4”	3/8”	33.70 **D**
LVPL38V	3/8” Female NPT Micro Valve	150	3/8”	3/8”	33.70 **D**

HOSE

***Add R to part number when ordering rolls.**

PVC WATER SUCTION HOSE

PVC WATER SUCTION HOSE				
Part#	Size ID	PSI	Price/Ft.	Price/Roll
PVC34	3/4”	100	2.09 **R**	171.00 **R**
PVC100	1”	90	2.42 **R**	198.00 **R**
PVC114	1-1/4”	70	2.86 **R**	234.00 **R**
PVC112	1-1/2”	70	3.52 **R**	288.00 **R**
PVC200	2”	60	5.25 **R**	430.00 **R**
PVC212	2-1/2”	60	7.75 **R**	635.00 **R**
PVC300	3”	50	10.00 **R**	715.75 **R**
PVC400	4”	45	15.00 **R**	1,284.00 **R**
PVC500	5”	45		**SPECIAL ORDER**
PVC600	6”	35		**SPECIAL ORDER**

A PVC suction discharge hose for water, light chemicals and pumping service in the agricultural, rental, construction, marine and irrigation industries.
A smooth bore hose made of flexible abrasion resistant extruded clear PVC with a rigid PVC helix.
Standard roll length 100’.

EPDM FERTILIZER SOLUTION SUCTION HOSE (BUMBLE BEE)

EPDM FERTILIZER SOLUTION SUCTION HOSE				
Part#	Size ID	PSI	Price/Ft	Price/Roll
BEE100	1”	80	3.52 **R**	282.00 **R**
BEE114	1-1/4”	70	3.98 **R**	326.25 **R**
BEE112	1-1/2”	60	4.25 **R**	350.00 **R**
BEE200	2”	60	6.00 **R**	522.00 **R**
BEE300	3”	50	10.25 **R**	922.00 **R**
BEE400	4”	45		**SPECIAL ORDER**

A EPDM with polyethylene helix reinforcement that serves as a scuff strip.A light weight, rugged, flexible suction and discharge hose for the agricultural, rental, mining and construction industries.
Hose is resistant to diluted herbicides & fertilizers and has good flexibility even in cold weather.
Standard roll length 100’.

REINFORCED EPDM FERTILIZER SUCTION HOSE (ENFORCER)

REINFORCED EPDM FERTILIZER SOLUTION SUCTION HOSE					
Part#	Size ID	PSI	Price/Ft	Price 50’ Roll	Price 100’ Roll
EFSH 114	1-1/4”		5.59 **R**		485.00 **R**
EFSH112	1-1/2”	100	7.00 **R**	311.75 **R**	565.00 **R**
EFSH200	2”	60	8.85 **R**	405.00 **S**	730.00 **R**
EFSH300	3”	50	16.25 **R**	675.00 **S**	1,325.00 **R**
EFSH400	4”	45			2,400.00 **R**

A reinforced, flexible suction & discharge hose. Hose is resistant to diluted pesticides and has good flexibilty even in cold weather.
Standard roll length 100’.

DUE TO THE VOLATILITY OF THE PETROLEUM MARKET, HOSE PRICES ARE SUBJECT TO CHANGE.

**Add R to part number when ordering rolls.*

CHEM-FLEX X-LINK CHEMICAL SUCTION HOSE

CHEMFLEX X-LINK CHEMICAL SUCTION HOSE			
Part#	Size ID	PSI	Price/Ft
XLINK114	1-1/4”	200	25.54 **R**
XLINK112	1-1/2”	200	25.69 **R**
XLINK200	2”	200	30.72 **R**
XLINK300	3”	150	46.83 **R**

Recommended for general undiluted chemical transfer.
Cover is EPDM that is abrasion and oil resistant. Tube is two plies of synthetic textile cord and a wire helix.
Standard roll lenght 100’.

RUBBER SPRAY HOSE

RUBBER SPRAY HOSE - 2 SPIRAL POLYESTER YARN				
Part#	Size ID	PSI	Price/Ft	Price/Roll
RSH14	1/4”	200	1.05 **R**	98.80 **R**
RSH38	3/8”	200	1.24 **R**	107.68 **R**
RSH12	1/2”	200	1.82 **R**	148.20 **R**
RSH58	5/8”	200	2.39 **R**	
RSH34	3/4”	200	2.70 **R**	211.77 **R**
RSH100	1”	200	3.25 **R**	288.33 **R**
RSH200	2”	200	13.00 **R**	**Call for Price**

RUBBER SPRAY HOSE - 4 SPIRAL POLYESTER YARN				
Part#	Size ID	PSI	Price/Ft	Price/Roll
RSH14HD	1/4”	300	1.74 **R**	145.00 **R**
RSH38HD	3/8”	300	1.89 **R**	150.00 **R**
RSH12HD	1/2”	300	2.67 **R**	208.67 **R**
RSH58HD	5/8”	300	3.78 **R**	302.28 **R**
RSH34HD	3/4”	300	3.41 **R**	250.00 **R**
RSH100HD	1”	200	5.41 **R**	323.66 **R**
RSH114HD	1-1/4”	150	7.67 **R**	**Call for Price**
RSH112HD	1-1/2”	150	9.00 **R**	**Call for Price**

Black EPDM rubber with a 2 or 4 spiral yarn reinforced tube.
General purpose, flexible pressure hose for various agricultural, construction and industrial purposes.
Standard roll length 100’.

EPDM RUBBER WIRE SUCTION HOSE

EPDM RUBBER WIRE SUCTION HOSE				
Part#	Size ID	PSI	Price/Ft	Price/Roll
RWS100	1”	150	12.21 **R**	**Call for Price**
RWS114	1-1/4”	150	11.63 **R**	**Call for Price**
RWS112	1-1/2”	150	11.74 **R**	**Call for Price**
RWS200	2”	120	15.35 **R**	**Call for Price**
RWS300	3”	85	19.53 **R**	**Call for Price**
RWS400	4”	75		**Call for Price**

A lightweight and flexible hose for the agricultural and industrial industries.
The smooth EPDM tube is adaptable as a material handling, vacuum or ducting hose.
Spiral helix wire adds flexibility and crush resistance.
EPDM cover is resistant to abrasion and rough handling conditions.
Standard roll length 100’.

DUE TO THE VOLATILITY OF THE PETROLEUM MARKET, HOSE PRICES ARE SUBJECT TO CHANGE.

HOSE

Add R to part number when ordering rolls.

PVC SIGHT GAUGE HOSE

Clear, flexible and lightweight tubing that provides full-flow viewing.
Temperature range: -20F to 150F.
Standard roll length 100' for 1/4" to 1"
50' for 1-1/4" to 2".

PVC SIGHT GAUGE HOSE				
Part#	Size ID	PSI	Price/Ft	Price/Roll
SGH316	3/16"		.88 **R**	
SGH14	1/4"	70	.88 **R**	69.00 **R**
SGH38	3/8"	60	1.16 **R**	75.00 **R**
SGH12	1/2"	45	1.71 **R**	139.50 **R**
SGH58	5/8"	40	2.03 **R**	166.50 **R**
SGH34	3/4"	35	2.20 **R**	180.00 **R**
SGH100	1"	25	2.90 **R**	240.75 **R**
SGH114	1-1/4"	40	9.13 **R**	350.00 **R**
SGH112	1-1/2"	35	15.10 **R**	500.00 **R**
SGH200	2"	30	18.07 **R**	725.00 **R**

BRAIDED VINYL TUBING

PVC sight gauge tubing with braided reinforcing. Use when a clear hose needing higher working pressure and reinforcement is required.

Standard roll length: 100' for 1/4" to 3/4"
100' for 1".

BRAIDED VINYL TUBING				
Part#	Size ID	PSI	Price/Ft	Price/Roll
BSGH14	1/4"	250	.74 **R**	162.00 **R/300'**
BSGH38	3/8"	225	.95 **R**	92.34 **R**
BSGH12	1/2"	200	1.45 **R**	128.48 **R**
BSGH58	5/8"	200	1.59 **R**	144.92 **R**
BSGH34	3/4"	150	2.17 **R**	194.63 **R**
BSGH100	1"	125	3.22 **R**	262.28 **R**
BSGH114	1-1/4"		5.84 **R**	
BSGH112	1-1/2"		6.66 **R**	

Profile formulated to comply with FDA requirements.
Clear Polyvinyl Chloride reinforced with a synthetic cord.
Temperature range: -20F to 150F.

EVA TUBING

Used in agricultural, lawn and chemical transfer. Handles common herbicides and insecticide solutions. Used for the application of anhydrous ammonia, aqua ammonia, herbicides, phosphates and all liquid fertilizers.

Standard roll length: 500' for 1/4" to 1/2"
300' for 1/2"
250' for 5/8" to 3/4"
100' for 1"

Ethyl vinyl acetate plastic tubing.
Good chemical and weather resistance.
Temperature range: -50F to 125F.

EVA TUBING				
Part#	Size ID	PSI	Price/Ft	Price/Roll
EVA14	1/4"		.69 **R**	
EVA14R5 (500')	1/4"			270.00 **R**
EVA38	3/8"	75	.96 **R**	
EVA38R5 (500')	3/8"	75		390.00 **R**
EVA38B (Black)	3/8"		.98 **R**	
EVA38BR5 (Black 500')				400.00 **R**
EVA12	1/2"	75	1.07 **R**	
EVA12R5 (500')	1/2"	75		400.00 **R**
EVA12B (Black)	1/2"		1.12 **R**	
EVA12BR5 (Black 500')	1/2"			415.00 **R**
EVA58	5/8"	75	1.35 **R**	
EVA58R1 (100')	5/8"	75		111.17 **R**
EVA34	3/4"	60	1.75 **R**	
EVA34R2.5 (250')	3/4"	60		365.00 **R**
EVA100	1"	60	2.30 **R**	
EVA100R (100')	1"	60		189.86 **R**

DUE TO THE VOLATILITY OF THE PETROLEUM MARKET, HOSE PRICES ARE SUBJECT TO CHANGE.

**Add R to part number when ordering rolls.*

BRAIDED EVA TUBING

Used in agricultural, lawn and chemical transfer. Handles common herbicides and insecticide solutions. Used for the application of anhydrous ammonia, aqua ammonia, herbicides, phosphates and all liquid fertilizers.
Standard roll length: 300' for 1/4" to 3/4"
200' for 1"

BRAIDED EVA TUBING				
Part#	Size ID	PSI	Price/Ft	Price/Roll
BEAV14	1/4"	250	1.35 **R**	330.75 **R**
BEVA38	3/8"	225	1.98 **R**	486.00 **R**
BEVA12	1/2"	200	2.26 **R**	553.50 **R**
BEVA58	5/8"	200	3.33 **R**	816.75 **R**
BEVA34	3/4"	150	3.58 **R**	585.00 **R**
BEVA100	1"	125	4.50 **R**	693.00 **R**

Ethyl vinyl acetate plastic tubing. Good chemical and weather resistance.
Temperature range: -50F to 125F.

PVC DISCHARGE HOSE

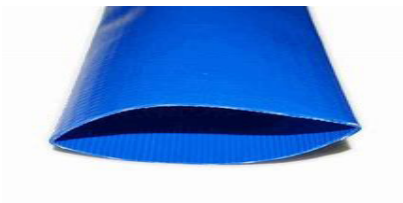

Discharge hose for water, light chemicals and the pumping service in the agricultural, rental, construction, marine and irrigation industries. Strong, lightweight, non-water-absorbing and mildew-proof hose that rolls up flat for easy storage.
Standard roll length 300'.

PVC DISCHARGE HOSE				
Part#	Size ID	PSI	Price/Ft	Price/Roll
PVCD114	1-1/4"	80	1.98 **R**	438.45 **R**
PVCD112	1-1/2"	75	1.07 **R**	263.25 **R**
PVCD200	2"	70	1.35 **R**	330.75 **R**
PVCD212	2-1/2"	60	2.64 **R**	648.00 **R**
PVCD300	3"	55	2.12 **R**	519.75 **R**
PVCD400	4"	45	3.00 **R**	825.00 **R**
PVCD600	6"	40	5.50 **R**	1,400.00 **R**
PVCD800	8"	35	SPECIAL ORDER	

Tube and cover are PVC reinforced with 3 ply polyester yarns.
Temperature range: -5F to 130F.

PVC HEAVY-DUTY DISCHARGE HOSE

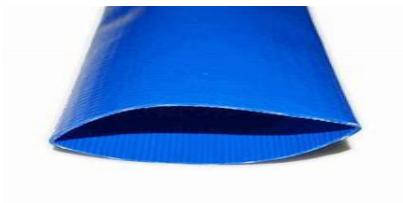

Discharge hose for water, light chemicals and the pumping service in the agricultural, rental, construction, marine and irrigation industries. Strong. lightweight, non-water-absorbing and mildew-proof hose that rolls up flat for easy storage.
Standard roll length 300'.

PVC HEAVY-DUTY DISCHARGE HOSE				
Part#	Size ID	PSI	Price/Ft	Price/Roll
PVCDHD112	1-1/2"	150	1.95 **R**	515.00 **R**
PVCDHD200	2"	150	3.44 **R**	843.75 **R**
PVCDHD212	2-1/2"	150	8.45 **R**	1,825.20 **R**
PVCDHD300	3"	150	6.82 **R**	1,674.00 **R**
PVCDHD400	4"	150	7.80 **R**	1,995.00 **R**
PVCDHD600	6"	150	SPECIAL ORDER	
PVCDHD800	8"	115	SPECIAL ORDER	

Tube and cover are PVC reinforced with 3 ply polyester yarns.
Temperature range: -5F to 130F

DUE TO THE VOLATILITY OF THE PETROLEUM MARKET, HOSE PRICES ARE SUBJECT TO CHANGE.

HOSE

Add R to part number when ordering rolls.

PVC SPRAY HOSE

PVC SPRAY HOSE				
Part#	Size ID	PSI	Price/Ft	Price/Roll
YPVC38	3/8”	600	1.73 **R**	425.00 **R**
YPVC12	1/2”	600	2.12 **R**	550.00 **R**
YPVC58	5/8”	600	5.14 **R**	1,122.00 **R**
YPVC34	3/4”	600	4.37 **R**	954.00 **R**

PVC high pressure spray hose for use with fertilizer, herbicides and insecticides in both agricultural, lawn spray service, carpet cleaning and roof cleaning industries.
Standard roll length 300’.

PVC Tube and cover, co-extrude with single braided synthetic cord. Black tube and yellow ribbed nonmarking cover, lightweight, flexible abrasion resistant hose.

620 WD DUCT HOSE

620 WD DUCT HOSE		
Part#	Size ID	Working PSI
620WD3	3”	12
620WD4	4”	9
620WD5	5”	7
620WD6	6”	6
620WD7	7”	5
620WD8	8”	4
620WD10	10”	3
620WD12	12”	3

CALL FOR PRICE

General ducting and blower applications.
For use with lightweight abrasives.
Construction : EPDM rubber, metal wire helix, smooth bore, slightly corrugated OD.
Rated for -40 to 220 degrees. Abrasion resistant yet very flexible.
100% rubber sidewall (no fabric).

DUE TO THE VOLATILITY OF THE PETROLEUM MARKET, HOSE PRICES ARE SUBJECT TO CHANGE.

UNIVERSAL HOSE REEL

ELECTRIC:
PART# HR200ESS (2”) $1,888.00 Y
PART# HR300ESS (3”) $3,044.00 Y

FEATURES:
SPECIAL SEALED SWIVEL
SWIVEL 2” FULL PORT
POSITIVE TRANSPORT LOCK
LARGE HOSE CAPACITY
(65’- 2” OR 105’ - 1-1/2”)
EASY RETRIEVE (3-1 REDUCTION)
MOUNTS IN MINUTES
STAINLESS STEEL SWIVEL

MANUAL:
PART# HR200SS (2”) $1,390.00 Y

ADVANTAGES:
CRANK MOUNTS ON EITHER SIDE
LOAD FROM THE ROAD
DOUBLE OR TRIPLE HOSE LIFE
EXCELLENT HOSE STORAGE
REDUCE OPERATOR FATIGUE
STAINLESS STEEL SWIVEL

T-BOLT HOSE CLAMPS				
Part#	Min Dia	Max Dia	Size	Price
TC120	1.20”	1.34”	75 in-lbs	9.15 **D**
TBC150	1-3/8”	1-9/16”	1-1/2”	6.18 **R**
TBC175	1-5/8”	1-13/16”	1-3/4”	6.18 **R**
TBC188	1-3/4”	1-15/16”	1-7/8”	9.25 **R**
TBC200	1-7/8”	2-1/16”	2”	6.18 **R**
TBC225	2-1/8”	2-5/16”	2-1/4”	6.18 **R**
TBC238	2-1/4”	2-7/16”	2-3/8”	6.18 **R**
TBC250	2-3/8”	2-9/16”	2-1/2”	6.18 **R**
TBC256	2-11/32”	2-5/8”	2-9/16”	6.18 **R**
TBC263	2-13/16”	2-11/16”	2-5/8”	6.18 **R**
TBC275	2-17/32”	2-13/16”	2-13/16”	6.18 **R**
TBC300	2-25/32”	3-1/16”	3”	6.18 **R**
TBC312	2-29/32”	3-3/16”	3-1/8”	6.18 **R**
TBC325	3-1/32”	3-5/16”	3-1/4”	6.18 **R**
TBC350	3-9/32”	3-9/16”	3-1/2”	6.18 **R**
TBC375	3-17/32”	3-13/16”	3-3/4”	6.18 **R**
TBC400	3-25/32”	4-1/16”	4”	6.18 **R**
TBC450	4-9/32”	4-9/16”	4-1/2”	6.18 **R**
TBC475	4-17/32”	4-13/16”	4-3/4”	6.18 **R**

WORM GEAR HOSE CLAMPS			
Part#	Min Dia	Max Dia	Price
HCSS006	3/8”	7/8”	1.33 **D**
HCSS008	7/16”	1”	1.45 **D**
HCSS010	9/16”	1-1/16”	1.45 **D**
HCSS012	9/16”	1-1/4”	1.45 **D**
HCSS016	11/16”	1-1/2”	1.48 **D**
HCSS020	3/4”	1-3/4”	1.48 **D**
HCSS024	1-1/16”	2”	1.48 **D**
HCSS028	1-5/16”	2-1/4”	1.48 **D**
HCSS036	1-13/16”	2-3/4”	1.55 **D**
HCSS048	2-9/16”	3-1/2”	1.55 **D**
HCSS052	1-7/8”	3-3/4”	1.78 **D**
HCSS056	3-1/16”	4”	1.65 **D**
HCSS064	2-1/2”	4-1/2”	1.70 **D**
HCSS072	3-1/8”	5”	1.90 **D**
HCSS096	4-3/4”	6-1/2”	4.43 **D**
HCSS104	4”	7”	4.60 **D**
Micro Worm Gear Hose Clamps			
Part#	Min Dia	Max Dia	Price
HCSS5S	7/16”	11/16”	0.96 **D**
HCSS6S	1/4”	5/8”	0.96 **D**
HCSS8S	7/16”	1”	0.96 **D**

PRESSURE SEAL HD CLAMP			
Part#	Min Dia	Max Dia	Price
PC238	1.62”	2.12”	6.25 **D**
PC275	2.00”	2.50”	6.25 **D**
PC288	2.12”	2.62”	6.25 **D**
PC300	2.25”	2.75”	6.25 **D**
PC325	2.50”	3.00”	6.50 **D**
PC350	2.75”	3.25”	6.50 **D**
PC375	2.88”	3.50”	6.50 **D**
PC400	3.12”	3.75”	6.50 **D**
PC425	3.31”	4.00”	7.50 **D**
PC450	3.44”	4.25”	7.50 **D**
PC512	4.06”	4.87”	7.50 **D**

Skin Saver
Protect users from cuts and scrapes.

SKIN SAVER			
PART#	USE ON	BAG QTY	PRICE
KSS500-10	Hose Clamp 1/2” Band Width	10	2.20 **D**
KSS625-10	Hose Clamp 5/8” Band Width	10	2.20 **D**
KSS562-100	Flange Clamp	10	2.20 **D**

INSPECTION AND CARE OF ANHYDROUS AMMONIA HOSE

IMPORTANT - READ CAREFULLY
Anhydrous Ammonia hose has a limited life and the user must be alert to signs of impending failure. Periodic inspection and testing, as described in Rubber Manufacturers Association (RMA) publication IP-11-12, is recommended to detect signs indicating hose deterioration or loss of performance before conditions leading to malfunction or failure are reached.

All new hose assemblies should be inspected prior to use to determine if they have been damaged in storage of shipment. Hose subjected to severe usage - for example, dragged over sharp rock surfaces, or sharply bent in storage or continually exposed to weather - will deteriorate more rapidly than carefully handled hose. The hose should be visually inspected each day before use.

INSPECTION PROCEDURE:
Lay out the full length of the hose in a clean and preferably dry area. Inspect the outside cover of the hose for blistering, excessive abrasion or cuts, and coupling slippage. This inspection will be made when the hose is not under pressure.

#1
Cuts in hose cover which expose or damage the reinforcement are **cause for immediate replacement.**
Small cuts, nicks or gouges in the cover which do not go completely through the cover are not cause for replacement of the hose. Hose strength is controlled by plies of reinforcement, and for this reason, damage in this area cannot be tolerated.
Note: Pricking the hose cover is necessary for satisfactory hose performance. A uniformly pricked cover should not be viewed with alarm.

#2
Damaged to the textile or wire braid is cause for immediate hose replacement. Wire braid reinforced hose that has been kinked or flattened, so as to permanently deform the wire braid in the depressurized state, **shall be removed from service.**

#3
Blistered or loose outer cover is **cause for immediate hose replacement.**

#4
Examine couplings for slippage. **Only permanently attached fittings are to be used with anhydrous ammonia hose. Bolt on or clamp on type fittings must not be used.**

WARNING:
A failure in service can result in injury to personnel or damage to property. Do not use at temperatures or pressures above those recommended by Parker Dayco. Anhydrous ammonia is extremely volatile - and poisonous - in both liquid and gaseous (vapor) states. Contact with either state of anhydrous ammonia will burn skin and is especially damaging to the eyes and lungs. Improper hose applications or failure to inspect the hose may lead to life-threatening situations, poisonous gas leakages, fires or explosions. Do not use anhydrous ammonia hose for LP gas, natural gas or refrigeration applications. Do not use with male swivel couplings. Do not use LP gas hose for anhydrous ammonia applications.

NOTE: See price sheet for factory coupled assemblies.

ASSEMBLIES ARE AVAILABLE WITH STAINLESS STEEL OR NYLON REINFORCEMENT WITH TWO M X M CRIMP-ON FITTINGS. APACHE COUPLED HOSES CARRY A PRORATED WARRANTY.

NOTE: Warranty on bulk anhydrous ammonia hose is valid **ONLY** when coupled by a Parker Dayco certified coupler, using Parker Dayco specified couplings.

ANHYDROUS AMMONIA HOSE

Anhydrous ammonia hose designed to handle NH3 to 350psi working pressure with 5:1 safety factor (175psi minimum burst).
Degradation resistant nylon reinforcement provided flexibility with high tensile strength.
Synthetic cover provides excellent ozone and abrasion resistance.
Compatible with N-Serve when used in recommended concentrations.
Meets or exceeds RMA/TFI/ANSI.

Warning:

For anhydrous ammonia use only. DO NOT use LP, natural gas or refrigeration applications. DO NOT use with male swivel couplings.

Tube: Permeation resistant synthetic compound.

Cover: Perforated with green stripe.

Reinforcement: Multiple nylon braids.

Branding: (Side 1 embossed) Dayco USA 7262 Nylon Anhydrous Ammonia - (mfg year) - Remove no later that (year) - 350psi MAXWP RMA (s/n) - Caution Anhydrous Ammonia Use Only. (Side 2) Green identification stripe.

NH3 HOSE ASSEMBLIES

NH3 HOSE ASSEMBLIES					NH3 HOSE ASSEMBLIES			
1” NH3 HOSE w/CRIMPED 1” MPT END					1-1/4” NH3 HOSE w/CRIMPED 1-1/4” MPT ENDS			
Part#	Size ID	Length	PSI		Part#	Size ID	Length	PSI
AAHA100-3	1”	3’	350		AAHA114-3	1-1/4”	3’	350
AAHA100-5	1”	5’	350		AAHA114-5	1-1/4”	5’	350
AAHA100-8	1”	8’	350		AAHA114-8	1-1/4”	8’	350
AAHA100-10	1”	10’	350		AAHA114-10	1-1/4”	10’	350
AAHA100-12	1”	12’	350		AAHA114-12	1-1/4”	12’	350
AAHA100-15	1”	15’	350		AAHA114-15	1-1/4”	15’	350
AAHA100-18	1”	18’	350		AAHA114-20	1-1/4”	20’	350
					AAHA114-25	1-1/4”	25’	350

Custom sizes available: 1” , 1-1/4” & 1-1/2”.
NH3 hose w/crimped male pipe thread ends.
Call for pricing.

DUE TO THE VOLATILITY OF THE PETROLEUM MARKET, HOSE PRICES ARE SUBJECT TO CHANGE.

PRESSURE GAUGES & ACCESSORIES

ANHYDROUS AMMONIA GAUGE			
Part#	Range	Dial Size	Price
AAG60-212	0-60 PSI	2-1/2”	20.67 **D**
AAG60-400	0-60 PSI	4”	40.63 **D**
AAG160-212	0-160 PSI	2-1/2”	20.67 **D**
AAG160-400	0-160 PSI	4”	40.63 **D**
AAG400-212	0-400 PSI	2-1/2”	20.67 **D**
AAG400-400	0-400 PSI	4”	40.63 **D**

ANHYDROUS AMMONIA

GLYCERIN FILLED GAUGE			
Part#	Range	Dial Size	Price
GSG15-400SS	15 PSI	4”	63.37 **D**
GSG60-212	60 PSI	2-1/2”	19.99 **D**
GSG60-400	60 PSI	4”	63.37 **D**
GSG60SS-212	60 PSI	2-1/2”	52.64 **D**
GSG60SS-400	60 PSI	4”	97.54 **D**
GSG100-212	100 PSI	2-1/2”	19.99 **D**
GSG100-400	100 PSI	4”	63.37 **D**
GSG100SS-212	100 PSI	2-1/2”	52.64 **D**
GSG100SS-400	100 PSI	4”	97.54 **D**
GSG150SS-212	150 PSI	2-1/2”	52.64 **D**
GBMSG160-400*	160 PSI	4”	63.37 **D**
GSG160-212	160 PSI	2-1/2”	19.99 **D**
GSG160-400	160 PSI	4”	63.37 **D**
GSG160SS-212	160 PSI	2-1/2”	54.64 **D**
GSG200-212	200 PSI	2-1/2”	19.99 **D**
GSG200-400	200 PSI	4”	63.37 **D**
GSG300-212	300 PSI	2-1/2”	19.99 **D**
GSG300SS-212	300 PSI	2-1/2”	52.64 **D**
GSG300SS-400	300 PSI	4”	97.54 **D**
GSG400-212	400 PSI	2-1/2”	19.99 **D**
GSG400-400	400 PSI	4”	63.37 **D**
GSG400SS-212	400 PSI	2-1/2”	52.64 **D**
GSG1000-212	1000 PSI	2-1/2”	19.99 **D**
GSG1500SS-212	1500 PSI	2-1/2”	52.64 **D**
GSG3000-212	3000 PSI	2-1/2”	19.99 **D**
* Back Mount Gauge			

BACK MOUNT GAUGE

GLYCERIN FILLED

SPRAYER GAUGE

VACUUM GAUGE

BACK MOUNT GAUGE			
Part#	Range	Dial Size	Price
BMSG30-112	0-30 PSI	1-1/2”	8.83 **D**
BMSG60-200	0-60 PSI	2”	9.55 **D**
BMSG60-212	0-60 PSI	2-1/2”	11.89 **D**
BMSG100-200	0-100 PSI	2”	9.55 **D**
BMSG100-212	0-100 PSI	2-1/2”	11.89 **D**
BMSG160-200	0-160 PSI	2”	9.55 **D**
BMSG200-212	0-200 PSI	2-1/2”	21.25 **D**

SPRAYER GAUGE			
Part#	Range	Dial Size	Price
SG30-212	30 PSI	2-1/2”	11.20 **D**
SG60-200	60 PSI	2”	9.00 **D**
SG60-212	60 PSI	2-1/2”	11.20 **D**
SG60-400	60 PSI	4”	23.26 **D**
SG100-200	100 PSI	2”	9.00 **D**
SG100-212	100 PSI	2-1/2”	11.20 **D**
SG100-400	100 PSI	4”	23.26 **D**
SG160-112	160 PSI	1-1/2”	8.83 **D**
SG160-200	160 PSI	2”	9.00 **D**
SG160-212	160 PSI	2-1/2”	11.20 **D**
SG160-400	160 PSI	4”	23.26 **D**
SG200-212	200 PSI	2-1/2”	11.20 **D**
SG200-400	200 PSI	4”	23.26 **D**
SG300-200	300 PSI	2”	9.00 **D**
SG300-212	300 PSI	2-1/2”	11.20 **D**
SG400-212	400 PSI	2-1/2”	11.20 **D**
SG400-400	400 PSI	4”	29.84 **D**

VACUUM GAUGE			
Part#	Range	Dial Size	Price
VG30-400	30 PSI	4”	29.84 **D**

REDUCING COUPLER			
Part#	FPT	MPT	Price
MF1814B	1/4”	1/8”	5.73 **D**

HYPRO LINE STRAINERS

HYPRO POLYPROPYLENE STRAINERS
HAVE A STAINLESS STEEL SCREEN AND EPDM GASKETS.
POLYPROPYLENE IS MOST RESISTANT TO ACIDS.
RATING: 80 PSI @ 70 DEGREES F.

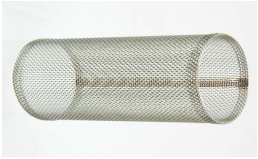

HYPRO POLYPROPYLENE LINE STRAINERS			
Part#	NPT Thread	Mesh	Price
3350-0085A	1/4"F & 1/2"M	20ss	22.61 **R**
3350-0079A	1/4"F & 1/2"M	50ss	16.69 **R**
3350-0082A	1/4"F & 1/2"M	80ss	16.69 **R**
3350-0056A	1/2"	20ss	25.44 **R**
3350-0046A	1/2"	50ss	25.44 **R**
3350-0043A	1/2"	80 on 20ss	27.42 **R**
3350-0040A	3/4"	20ss	27.42 **R**
3350-0034A	3/4"	50ss	27.42 **R**
3350-0035A	3/4"	80 on 20ss	29.41 **R**
3350-0057A	1"	20ss	37.35 **R**
3350-0058A	1"	50ss	37.35 **R**
3350-0059A	1"	80 on 20ss	41.74 **R**
3350-0071A	1-1/4"	20ss	41.74 **R**
3350-0072A	1-1/4"	50ss	41.74 **R**
3350-0073A	1-1/4"	80 on 20ss	53.58 **R**
3350-0112A	1-1/2"	20ss	45.43 **R**
3350-0113A	1-1/2"	50ss	45.43 **R**
3350-0114A	1-1/2"	80 on 20ss	54.63 **R**

REPLACEMENT PARTS						
ITEM	SIZE AND DESCRIPTION					
	1/4"F & 1/8"M	1/2"	3/4"	1"	1-1/4"	1-1/2"
	Cap					
PART#	3351-0035	3351-0037	3351-0038	3351-0040	3351-0041	3351-0042
PRICE	4.47 **R**	11.34 **R**	11.80 **R**	20.67 **R**	24.57 **R**	29.11 **R**
	Bowl					
PART#	3351-0036	3351-0039	3351-0039	3351-0043	3351-0043	3351-0043
PRICE	4.13 **R**	7.72 **R**	7.72 **R**	30.35 **R**	30.35 **R**	30.35 **R**
	Gasket					
PART#	1700-0090			1700-0092	1700-0092	1700-0092
PRICE	1.51 **A**			2.60 **A**	2.60 **A**	2.60 **A**

REPLACEMENT SCREENS	
Part#	Price
3800-0048 (20 Mesh)	8.59 **R**
3800-0046 (50 Mesh)	4.23 **R**
3800-0047 (80 Mesh)	8.36 **R**
3800-0029 (20 Mesh)	12.44 **R**
3800-0025 (50 Mesh)	10.52 **R**
3800-0026 (80/20 Mesh)	16.87 **R**
3800-0029 (20 Mesh)	12.44 **R**
3800-0025 (50 Mesh)	10.52 **R**
3800-0026 (80/20 Mesh)	16.87 **R**
3800-0040 (20 Mesh)	15.55 **R**
3800-0041 (50 Mesh)	15.55 **R**
3800-0042 (80/20 Mesh)	26.17 **R**
3800-0043 (20 Mesh)	15.55 **R**
3800-0044 (50 Mesh)	15.55 **R**
3800-0045 (80/20 Mesh)	29.60 **R**
3800-0065 (20 Mesh)	25.79 **R**
3800-0066 (50 Mesh)	22.78 **R**
3800-0067 (80/20 Mesh)	36.78 **R**

Y-STRAINERS & SCREENS

BANJO Y-LINE STRAINER FEATURES:
***MANUFACTURED FROM GLASS REINFORCED POLYPROPYLENE**
***PRECISION MOLDED**
***CORROSION RESISTANT**
***SIZES FROM 1/2" TO 3"**
***6 TO 80 MESH SCREENS**
***CLEAN OUT PLUG ON 1-1/2", 2" & 3"**
***EPDM GASKETS STANDARD**
***PRESSURE RATINGS:**
1/2" TO 1-1/4" - 75 PSI
1-1/2" TO 2" - 150 PSI
3" - 75 PSI (SUCTION SIDE ONLY)

Y-LINE STRAINERS		
Part#	**Size**	**Price**
BLS50B/C1	1/2"	25.10 **D**
BLS75B/C1	3/4"	25.10 **D**
BLS100B/C1	1"	25.10 **D**
BLS125B/C1	1-1/4"	25.10 **D**
BLS150B/C	1-1/2"	56.25 **D**
BLS200B/C	2"	56.25 **D**
BLSM300BC	3"	454.70 **D**

Y-LINE STRAINER REPLCEMENT SCREENS							
ITEM	**SIZE & DESCRIPTION**						
	1/2"	3/4"	1"	1-1/4"	1-1/2"	2"	3"
	6 MESH (WHITE)						
PART#					BLS206	BLS206	
PRICE					63.25 **D**	63.25 **D**	
	8 MESH						
PART#							BLS308
PRICE							190.30 **D**
	12 MESH (BLACK)						
PART#					BLS212	BLS212	BLS312
PRICE					57.48 **D**	57.48 **D**	190.30 **D**
	20 MESH (BEIGE)						
PART#	BLS720	BLS720	BLS120	BLS120	BLS220	BLS220	BLS320
PRICE	31.95 **D**	31.95 **D**	31.95 **D**	31.95 **D**	58.48 **D**	58.48 **D**	172.98 **D**
	30 MESH (YELLOW) ***NEW COLOR - FLAME RED						
PART#					BLS230	BLS230	
PRICE					58.48 **D**	58.48 **D**	
	40 MESH (BROWN)						
PART#	BLS740	BLS740	BLS140	BLS140			
PRICE	29.05 **D**	29.05 **D**	31.95 **D**	31.95 **D**			
	50 MESH (RED) ***NEW COLOR - GENETIAN BLUE						
PART#			BLS150	BLS150	BLS250	BLS250	BLS350
PRICE			31.95 **D**	31.95 **D**	58.48 **D**	58.48 **D**	172.98 **D**
	80 MESH (BLUE) ***NEW COLOR - ZINC YELLOW						
PART#	BLS780	BLS780	BLS180	BLS180	BLS280	BLS280	
PRICE	31.95 **D**	31.95 **D**	29.05 **D**	29.05 **D**	58.48 **D**	58.48 **D**	
	100 MESH (GREEN)						
PART#					BLS2100	BLS2100	
PRICE					63.25 **D**	63.25 **D**	
	120 MESH (BLACK)						
PART#					BLS2120	BLS2120	
PRICE					63.25 **D**	63.25 **D**	

Y-STRAINER PARTS, SUCTION BASKET & KLEEN FLO LAKE STRAINER

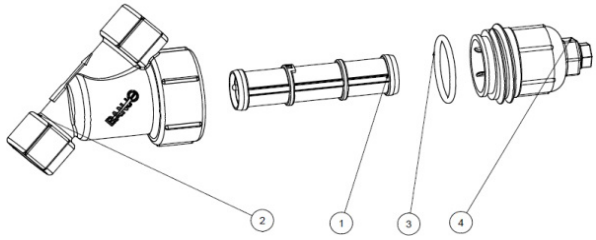

Y-LINE STRAINER REPLACEMENT PARTS						
ITEM	SIZE & DESCRIPTION					
	1/2"	3/4"	1"	1-1/4"	1-1/2"	2"
	Gasket					
PART#	BLS75-G	BLS75-G	BLS100-G	BLS100-G	BLS150-G	BLS150-G
PRICE	3.75 **D**	3.75 **D**	4.95 **D**	4.95 **D**	4.95 **D**	4.95 **D**
	Gasket - Viton					
PART#	BLS75-GV	BLS75-GV	BLS100-GV	BLS100-GV	BLS150-GV	BLS150-GV
PRICE	7.85 **D**	7.85 **D**	9.05 **D**	9.05 **D**	17.93 **D**	17.93 **D**
	Body, Cap & Gasket					
PART#		BLS75B/C1	BLS100B/C1	BLS125B/C1	BLS150B/C	BLS200B/C
PRICE		25.10 **D**	25.10 **D**	25.10 **D**	56.25 **D**	56.25 **D**
	Body					
PART#						
PRICE						
	End Cap					
PART#			BLS100-C1	BLS100-C1	BLS150-C	BLS150-C
PRICE			19.10 **D**	19.10 **D**	33.23 **D**	33.23 **D**
	Drain Plug					
PART#	12723	12723	12777	12777	BLSQ200-PL	BLSQ200-PL
PRICE	2.55 **D**	2.55 **D**	3.65 **D**	3.65 **D**	4.25 **D**	4.25 **D**
	EPDM O-ring for Drain Plug					
PART#	12724	12724	UV15163	UV15163	BLSQ200-R	BLSQ200-R
PRICE	1.18 **D**	1.18 **D**	1.28 **D**	1.28 **D**	1.33 **D**	1.33 **D**
	Viton O-ring for Drain Plug					
PART#			UV15163V	UV15163V	BLSQ200-RV	BLSQ200-RV
PRICE			5.18 **D**	5.18 **D**	2.15 **D**	2.15 **D**

KLEEN FLO LAKE STRAINER

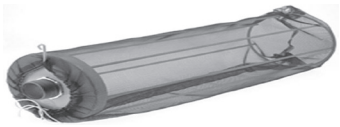

THE KLEEN FLO LAKE STRAINER OUTLET IS 2" MNPT, THE SCREEN IS MADE OF RUSTPROOF FIBERGLASS NETTING. HOOKS BUILT IN TO MAIN FRAME ALLOW SUSPENDING OFF BOTTOM. GREAT FOR LAKES, SLOUGHS & RIVERS.

PART#	DESCRIPTION	PRICE
KLEENFLO1	2" KLEEN FLO LAKE STRAINER	86.00 **Y**
KLEENFLO2	REPLACEMENT SCREEN	28.75 **Y**

SUCTION BASKET

SUCTION BASKET STRAINER		
PART#	DESCRIPTION	PRICE
200SBS	2" Female Thread Poly	26.30 **D**
200SBSS	2" Female Thread Plated Steel	31.65 **R**
300SBS	3" Female Thread Poly	59.28 **D**
300SBSS	3" Female Thread Plated Steel	46.98 **R**

T-STRAINER & REPLACEMENT PARTS

BANJO T-LINE STRAINER FEATURES:
***MANUFACTURED FROM GLASS REINFORCED POLYPROPYLENE**
***CORROSION RESISTANT**
***SIZES FROM 3/4" TO 1-1/2"**
***CLEAN-OUT PLUG**
***304 STAINLESS STEEL SCREENS**
***EPDM GASKETS STANDARD, VITON AVAILABLE**
***RATED TO 150 PSI @ 70F**

T-LINE REPLACEMENT PARTS				
ITEM	SIZE & DESCRIPTION			
	3/4"	1"	1-1/4"	1-1/2"
	Head, Bowl & Gasket			
PART#	BLST75-HB	BLST100-HB	BLST125-HB	BLST150-HB
PRICE	31.85 **D**	31.95 **D**	69.83 **D**	69.83 **D**
	Head			
PART#	BLST75-H	BLST100-H	BLST125- H	BLST150-H
PRICE	16.38 **D**	16.38 **D**	40.67 **D**	40.67 **D**
	Bowl			
PART#	BLST100-B	BLST100-B	BLST150-B	BLST150-B
PRICE	19.10 **D**	19.10 **D**	31.33 **D**	31.33 **D**
	Gasket			
PART#	BLST100-G	BLST100-G	BLST150-G	BLST150-G
PRICE	4.95 **D**	4.95 **D**	4.95 **D**	4.95 **D**
	Viton Gasket			
PART#	BLST100-GV	BLST100-GV	BLST150-GV	BLST150-GV
PRICE	10.28 **D**	10.28 **D**	11.48 **D**	11.48 **D**
	EPDM O-ring for Clean-Out Plug			
PART#	UV15163	UV15163	BLSQ200-R	BLSQ200-R
PRICE	1.28 **D**	1.28 **D**	1.33 **D**	1.33 **D**
	Clean-Out Plug			
PART#	12777	12777	BLSQ200-PL	BLSQ200-PL
PRICE	3.65 **D**	3.65 **D**	4.25 **D**	4.25 **D**
	Viton O-ring for Clean-Out Plug			
PART#	UV15163V	UV15163V	BLSQ200-RV	BLSQ200-RV
PRICE	5.18 **D**	5.18 **D**	2.15 **D**	2.15 **D**
	Screen O-ring			
PART#	13778	13778		
PRICE	2.43 **D**	2.43 **D**		

T-LINE STRAINERS			
Part#	Size	Mesh	Price
BLST75-16	3/4"	16	51.23 **D**
BLST75-30	3/4"	30	51.23 **D**
BLST75-50	3/4"	50	46.58 **D**
BLST75-80	3/4"	80	51.23 **D**
BLST75-100	3/4"	100	51.23 **D**
BLST100-16	1"	16	51.23 **D**
BLST100-30	1"	30	51.23 **D**
BLST100-50	1"	50	46.58 **D**
BLST100-80	1"	80	51.23 **D**
BLST100-100	1"	100	51.23 **D**
BLST125-16	1-1/4"	16	102.05 **D**
BLST125-30	1-1/4"	30	102.05 **D**
BLST125-50	1-1/4"	50	102.05 **D**
BLST125-80	1-1/4"	80	102.05 **D**
BLST150-30	1-1/2"	30	102.05 **D**
BLST150-50	1-1/2"	50	92.78 **D**
BLST150-80	1-1/2"	80	102.05 **D**
BLST150-100	1-1/2"	100	102.05 **D**

T-LINE STRAINER REPLACEMENT SCREEN				
ITEM	SIZE & DESCRIPTION			
	3/4"	1"	1-1/4"	1-1/2"
	16 MESH (GRAY) *** NEW COLOR - BROWN RED			
PART#	BLST116	BLST116	BLST1516	BLST1516
PRICE	27.88 **D**	27.88 **D**	42.83 **D**	42.83 **D**
	30 MESH (YELLOW) ***NEW COLOR - FLAME RED			
PART#	BLST130	BLST130	BLST1530	BLST1530
PRICE	27.88 **D**	27.88 **D**	42.83 **D**	42.38 **D**
	50 MESH (RED) ***NEW COLOR - GENETIAN BLUE			
PART#	BLST150	BLST150	BLST1550	BLST1550
PRICE	25.35 **D**	25.35 **D**	42.83 **D**	42.83 **D**
	80 MESH (BLUE) ***NEW COLOR - ZINC YELLOW			
PART#	BLST180	BLST180	BLST1580	BLST1580
PRICE	25.35 **D**	25.35 **D**	42.83 **D**	42.83 **D**
	100 MESH (GREEN) ***NEW COLOR - TRAFFIC GREEN			
PART#	BLST1100	BLST1100	BLST15100	BLST15100
PRICE	27.23 **D**	27.23 **D**	42.83 **D**	42.83 **D**

(866)775-8089
FAX (701)775-8217

FLUSH-OUT LINE STRAINER & REPLACEMENT PARTS

AA126ML STRAINER			
PART#	SIZE	MESH	PRICE
AA126ML-3-30	3/4”	30	49.26 S
AA126ML-3-50	3/4”	50	49.26 S
AA126ML-3-80	3/4”	80	49.26 S
AA126ML-3-100	3/4”	100	49.26 S
AA126ML-4-30	1”	30	49.26 S
AA126ML-4-50	1”	50	49.26 S
AA126ML-4-80	1”	80	49.26 S
AA126ML-4-100	1”	100	49.26 S
AA126ML-5-30	1-1/4”	30	100.79 S
AA126ML-5-50	1-1/4”	50	100.79 S
AA126ML-5-80	1-1/4”	80	100.79 S
AA126ML-5-100	1-1/4”	100	100.79 S
AA126ML-6-30	1-1/2”	30	100.79 S
AA126ML-6-50	1-1/2”	50	100.79 S
AA126ML-6-80	1-1/2”	80	100.79 S
AA126ML-6-100	1-1/2”	100	100.79 S

AA126 Flush-out Line Strainer
Features:
***200 PSI maxium pressure**
***Glass-filled polypropylene with EPDM gasket**
***Screens made of 304SS are removable for cleaning**
***Removable cap & o-ring for flush-out or self-cleaning**
***Replaces AA124**

REPLACEMENT PARTS				
ITEM	SIZE & DESCRIPTION			
	3/4”	1”	1-1/4”	1-1/2”
#1	Head			
PART#	CP50492-3/4-PP	CP50492-1-PP	CP63065-1-1/4-PP	CP63066-1-1/2-PP
PRICE	18.10 S	18.10 S	36.91 S	36.91 S
#2	Screen 30 Yellow - NEW COLOR - FLAME RED			
PART#	CP16903-3-SSPP	CP16903-3-SSPP	CP15941-2-SSPP	CP15941-2-SSPP
PRICE	19.80 S	19.80 S	27.88 S	27.88 S
#2	Screen 50 Red - NEW COLOR - GENTIAN BLUE			
PART#	CP16903-4-SSPP	CP16903-4-SSPP	CP15941-3-SSPP	CP15941-3-SSPP
PRICE	19.80 S	19.80 S	27.88 S	27.88 S
#2	Screen 80 Blue - NEW COLOR - ZINC YELLOW			
PART#	CP16903-5-SSPP	CP16903-5-SSPP	CP15941-4-SSPP	CP15941-4-SSPP
PRICE	19.80 S	19.80 S	27.88 S	27.88 S
#2	Screen 100 Green - NEW COLOR - TRAFFIC GREEN			
PART#	CP16903-6-SSPP	CP16903-6-SSPP	CP15941-5-SSPP	CP15941-5-SSPP
PRICE	19.80 S	19.80 S	27.88 S	27.88 S
#3	Gasket - Bowl			
PART#	CP50494-EPR	CP50494-EPR	CP48656-EPR	CP48656-EPR
PRICE	3.34 S	3.34 S	6.72 S	6.72 S
#4	Bowl			
PART#	CP50493-PP	CP50493-PP	CP48654-PP	CP48654-PP
PRICE	17.86 S	17.86 S	36.54 S	36.54 S
#5	Gasket - Cap			
PART#	CP63150-EPR	CP63150-EPR	CP63150-EPR	CP63150-EPR
PRICE	4.41 S	4.41 S	4.41 S	4.41 S
#6	Cap			
PART#	CP48655-PP	CP48655-PP	CP48655-PP	CP48655-PP
PRICE	6.53 S	6.53 S	6.53 S	6.53 S

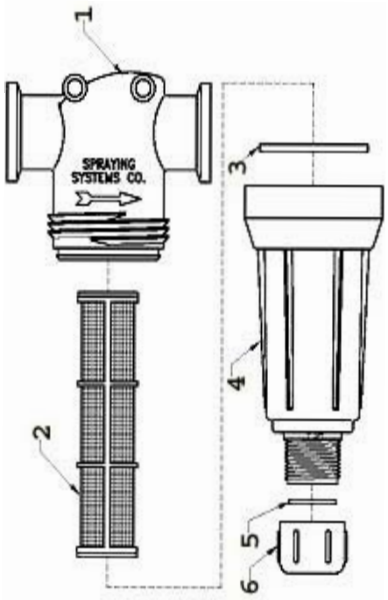

PRESSURE RELIEF & THROTTLING VALVES

DIAPHRAGM-TYPE PRESSURE RELIEF/REGULATING VALVE

BYPASSES EXCESS LIQUID. CHOICE OF 1/2" AND 3/4" NPT SIZES. CHEMICAL RESISTANT DIAPHRAGM SEALS OFF OPERATING PARTS FROM CONTACT WITH CHEMICALS AND REMAINS RESILIENT FOR CHATTER-FREE, RESPONSIVE PRESSURE CONTROL.

8460 FEATURES:
STAINLESS SPRINGS
FULL FLOW
NYLON & ALUMINUM CONSTRUCTION

DIAPHRAGM RELIEF MODEL 8460			
PART#	SIZE	RATING PSI	PRICE
8460-1/2	1/2"	300	95.25 V
8460-3/4	3/4"	300	95.25 V

PISTON-TYPE PRESSURE RELIEF/REGULATING VALVES

PISTON STYLE VALVES BYPASS EXCESS LIQUID. ADJUSTABLE TO MAINTAIN CONTROL OF LINE PRESSURE AT ANY PRESSURE WITHIN THE VALVE'S OPERATING RANGE. SELECTED PRESSURE SETTING FIRMLY HELD IN PLACE BY LOCKNUT. EXTRA LARGE VALVE PASSAGES TO HANDLE LARGE FLOW.

110 FEATURES:
REMOVABLE BONNET FOR SERVICING WITHOUT VALVE REMOVAL
DUCTILE IRON, ALUMINUM OR BRASS CONSTRUCTION

PISTON TYPE RELIEF MODEL 110			
PART#	SIZE	RATING PSI	PRICE
AA110-114	1-1/4"	150	378.11 V
AA110-112	1-1/2"	150	378.11 V
AA110-114DI	1-1/4"	150	295.81 V
AA110-112DI	1-1/2"	150	295.81 V
AA110-114AL	1-1/4"	150	256.30 V
AA110-112AL	1-1/2"	150	256.30 V

23520 FEATURES:
POLYPROPYLENE CONSTRUCTION
PRESSURE TO 150 PSI (10 BAR)
10 PSI PRESSURE DROP AT 6 GPM 1/2"
10 PSI PRESSURE DROP AT 18 GPM 3/4"

23120 FEATURES:
STAINLESS SPRING
EXCELLENT CHEMICAL RESISTANCE
1/4" PORT FOR PRESSURE GAUGE

PISTON STYLE THROTTLE VALVE MODEL 23520			
PART#	SIZE	RATING PSI	PRICE
23520-1/2-PP	1/2"	150	44.98 V
23520-3/4-PP	3/4"	150	44.98 V

PISTON STYLE RELIEF MODEL 23120			
PART#	SIZE	RATING PSI	PRICE
23120-1/2-PP	1/2"	150	51.91 V
23120-3/4-PP	3/4"	150	51.91 V

BOOM CONTROL VALVE

TeeJet Control Valve for the selective control of three-section boom sprayers at pressures up to 300 PSI.

TEEVALVE BOOM CONTROL VALVE				
PART#	**INLET**	**OUTLET**	**XTRA OUTLET**	**PRICE**
AA17L	3/4" NPT	3/4" NPT	3/4" NPT	194.53 **V**
AA17Y	1" NPT	3/4" NPT	3/4" NPT	194.53 **V**

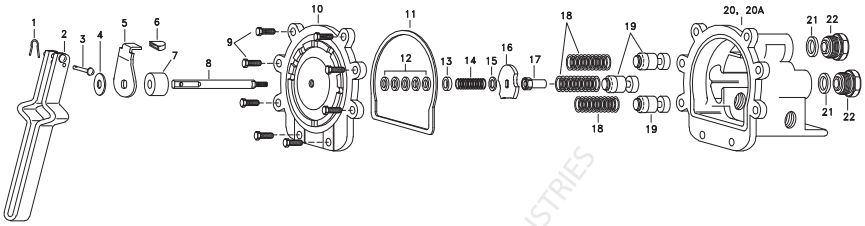

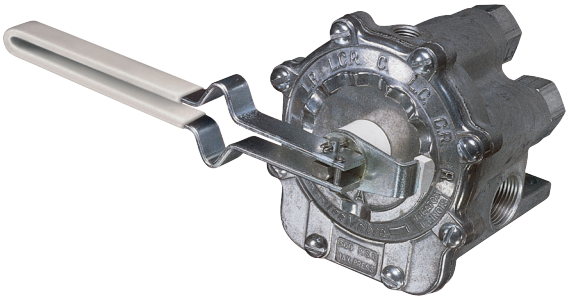

USE TO OPEN ANY OF THREE BOOM LINES IN ANY COMBINATION.

RAISE LEVER TO OPEN, LOWER TO CLOSE WITHOUT CHANGING THE INDEXED POSITION.

ALUMINUM CONSTRUCTION WITH STAINLESS STEEL AND PLASTIC INTERNAL PARTS FOR MAXIMUM CORROSION RESISTANCE.

AA17 PARTS			
REF#	**PART#**	**DESCRIPTION**	**PRICE**
1	CP8012-1/2SS	COTTER KEY	2.37 **V**
2	CP6849-1-IZP	HANDLE	13.81 **V**
3	CP7206-IZP	RIVET	8.23 **V**
4	CP6976-IZP	WASHER SPRING	5.90 **V**
5	CP12128-IZP	SHIELD	9.13 **V**
6	CP12127-CE	SHIELD TIP	6.07 **V**
7	CP12129-CE	SPACER	8.15 **V**
8	CP6972-SS	STEM	16.26 **V**
9	CP20607-IZP	SCREW (REQ 8)	3.40 **V**
10	CP12126-AL	COVER PLATE	75.96 **V**
11	CP6975-BU	GASKET BUNA-N	13.14 **V**
12	CP5809-LEA	PACKING (REQ 5)	2.37 **V**
13	CP12130-SS	PACKING GLAND	11.65 **V**
14		MAIN SPRING	
15		WASHER SS	
16	CP6971-AL	SELECTOR CAM	6.60 **V**
17		GUIDE NUT	
18	CP6959-SS	VALVE SPRING (REQ 3)	4.94 **V**
19	CP6956-CE	VALVE STEM (REQ 3)	6.09 **V**
20	CP6934-34-AL	BODY	88.47 **V**
21	CP6958-POL	SEAT PLATE (REQ 3)	10.08 **V**
22	CP7902-AL	OUTLET ADAPTER (REQ 3)	14.78 **V**

12 VOLT CONTROL VALVES

12 VOLT SOLENOID VALVES

THESE VALVES ARE DIRECT ACTING WITH LARGE INTERNAL FLOW CHAMBERS WITHOUT PILOT HOLES WHICH REDUCE THE CHANCES OF PLUGGING. STAINLESS STEEL WETTED PARTS PROVIDE ADDITIONAL CORROSION RESISTANCE.

OPERATES ON 12VDC.

144A ENCAPSULATED SOLENOID CAN BE CHANGED WITHOUT REMOVING VALVE FROM SYSTEM.

144A ELECTRIC VALVE

145 & 146 ELECTRIC VALVE

SPRAYING SYSTEMS SOLENOID VALVE					
PART#	INLET	OUTLET	MAX PSI	GPM	PRICE
AA144A-1	3/4”	1/2”	100	10	232.88 V
AA144A-2	3/4”	1/2”	100	10	471.74 V
AA144A-3	3/4”	1/2”	100	10	710.65 V
AA145H-1	1”	1”	100	15	533.16 V

VALVE REPAIR KITS		
VALVE#	KIT#	PRICE
144-1	AB144-1-KIT	41.86 V
144A-1	AB144A-1-KIT	41.86 V
144A-1	AB144A-1-VI-KIT	62.59 V
145H-1	AB145H-KIT	75.35 V
244C	AB244C-KIT	18.83 V

344B SHUT-OFF AND REGULATING BALL VALVES

*2 & 3 WAY VALVES AVAILABLE
*3/4” & 1” FNPT CONNECTIONS
*12 VOLT OPERATION
*WETTED PARTS ARE NYLON, POLYPROPYLENE, STAINLESS STEEL, TEFLON & VITON

SPRAYING SYSTEMS 12 VOLT SHUTOFF AND CONTROL VALVES							
PART#	OLD PART#	PORT SIZE	FLOW RATE	MAX PSI	TIME	TYPE	PRICE
344BEC-23-C	AA344AEC-2-3/4	3/4”	32 GPM	300	0.6 SEC	SHUTOFF	377.62 V
344BEC-24-C	AA344AEC-2-1	1”	32 GPM	300	0.6 SEC	SHUTOFF	377.62 V
344BEC-33-C	AA344AEC-3-3/4	3/4”	24 GPM	300	0.6 SEC	3-WAY	462.12 V
344BEC-34-C	AA344AEC-3-1	1”	24 GPM	300	0.6 SEC	3-WAY	462.12 V
344BRL-23-01C	AA344AE-2PR-34	3/4”	27 GPM	300	18 SEC	REGULATING	388.08 V
344BRL-24-01C	AA344AE-2PR-1	1”	27 GPM	300	18 SEC	REGULATING	388.08 V
344BRL-23-03C		3/4”	27 GPM	300	6 SEC	REGULATING	388.08 V
344BRL-24-03C		1”	27 GPM	300	6 SEC	REGULATING	388.08 V

ELECTRIC VALVES

MINI ELECTRIC VALVES

PART#	DESCRIPTION	PSI	SIZE	OPENING	PRICE
LEV038	3/8" Full Port Electric Valve	200	3/8"	3/8"	167.72 **A**
LEV050	1/2" Full Port Electric Valve	200	1/2"	15/32"	167.72 **A**

FEATURES:

*12 Volt DC
* Stationary current draw: less than 0.04 amps
* Rotating current draw: less than 0.04 amps
* Stall current: 0.75 amps
* Response time: 1/3 sec open to close
* TFM seats
*EPDM seals
* Fiberglass reinforced polyproplene
* Integrated mounting slot
* Standard 3 wire configuration
*Max Pressure =200 PSI @ 70*F

MINI MANIFOLD ELECTRIC VALVE

PART#	DESCRIPTION	PSI	SIZE	OPENING	PRICE
MLEV100	1" Electric Valve	200	1"	1/2"	179.02 **A**

LEV SERIES ELECTRIC PUSH LOCK VALVES

FEATURES:

*12 Volt DC
* Stationary current draw: less than 0.04 amps
* Rotating current draw: less than 0.04 amps
* Stall current: 0.75 amps
* Response time: 1/3 sec open to close
* TFM seats
*EPDM seals
* Fiberglass reinforced polyproplene
* Integrated mounting slot
* Standard 3 wire configuration
*Max Pressure 150 PSI

PART#	DESCRIPTION	PSI	SIZE	OPENING	PRICE
LEV38PL	3/8" FP Electric Valve	150	3/8"	3/8"	188.02 **A**

ELECTRIC BALL VALVES

*12-volt DC operated
*316 stainless steel ball & stem
*Fiberglass reinforced polypropylene
*Open/Closed indicator
*stainless steel hardware

ON/OFF & REGULATING

EVX ON/OFF WELDED/BOLTED ELECTRIC VALVE								
WELDED					OPENING	RESPONSE	BOLTED	
PART#	PRICE	DESCRIPTION	MAX PSI	PIPE SIZE	THRU BALL	TIME IN SECONDS	PART#	PRICE
		3/4" VALVE	300	3/4"	1"	3/4	EVX071	430.16 **A**
		1" FP VALVE	300	1"	1"	3/4	EVX101	440.92 **A**
		1-1/4" STD VALVE	300	1-1/4"	1"	3/4	EVX121	430.16 **A**
		1-1/2" FP VALVE	300	1-1/2"	1-1/2"	1-1/2	EVX151	630.56 **A**
		2" STD VALVE	300	2"	1-1/2"	1-1/2	EVX201	630.56 **A**
		2" FP VALVE	250	2"	2"	1-1/2	EVX221	682.22 **A**
EVX300	1,240.56 **A**	3" FP VALVE	150	3"	3"	3		

EVX REGULATING WELDED/BOLTED ELECTRIC VALVE								
WELDED					OPENING	RESPONSE	BOLTED	
PART#	PRICE	DESCRIPTION	MAX PSI	PIPE SIZE	THRU BALL	TIME IN SECONDS	PART#	PRICE
		3/4" VALVE	300	3/4"	1"	3/4	EVXR071	440.92 **A**
		1" FP VALVE	300	1"	1"	3/4	EVXR101	430.16 **A**
	S	1-1/4" STD VALVE	300	1-1/4"	1"	3/4	EVXR121	COMING SOON
		1-1/2" FP VALVE	300	1-1/2"	1-1/2"	1-1/2	EVRX151	630.56 **A**
	S	2" STD VALVE	300	2"	1-1/2"	1-1/2	EVXR201	646.22 **A**
	S	2" FP VALVE	250	2"	2"	1-1/2	EVXR221	682.22 **A**
		3" FP VALVE	150	3"	3"	4	EVXR300	1,240.56 **A**

BOTTOM & SIDE LOAD

EVX WELDED BOTTOM/SIDE LOAD ELECTRIC VALVE								
BOTTOM LOAD					OPENING	RESPONSE	SIDE LOAD	
PART#	PRICE	DESCRIPTION	MAX PSI	PIPE SIZE	THRU BALL	TIME IN SECONDS	PART#	PRICE
EVX075BL	495.50 **A**	3/4" FP VALVE	300	3/4"	1"	3/4	EVX075SL	503.44 **A**
EVX100BL	483.42 **A**	1" FP VALVE	300	1"	1"	3/4	EVX100SL	483.42 **A**
EVX125BL	483.42 **A**	1-1/4" FP VALVE	250	1-1/4"	1"	3/4	EVX125SL	483.42 **A**
EVX150BL	697.80 **A**	1-1/2" FP VALVE	250	1-1/2"	1-1/2"	1-1/2	EVX150SL	697.80 **A**
EVX200BL	697.80 **A**	2" STD VALVE	250	2"	1-1/2"	1-1/2	EVX200SL	697.80 **A**
EVX220BL	749.66 **A**	2" FP VALVE	150	2"	2"	1-1/2	EVX220SL	749.66 **A**

EVX BOLTED BOTTOM/SIDE LOAD REGULATING ELECTRIC VALVE								
BOTTOM LOAD					OPENING	RESPONSE	SIDE LOAD	
PART#	PRICE	DESCRIPTION	MAX PSI	PIPE SIZE	THRU BALL	TIME IN SECONDS	PART#	PRICE
EVXR075BL	COMING SOON	3/4" FP VALVE	300	3/4"	1"	3/4	EVXR075SL	COMING SOON
EVXR100BL	COMING SOON	1" FP VALVE	300	1"	1"	3/4	EVXR100SL	COMING SOON
EVXR125BL	COMING SOON	1-1/4" FP VALVE	300	1-1/4"	1"	3/4	EVXR125SL	COMING SOON
EVXR150BL	COMING SOON	1-1/2" FP VALVE	300	1-1/2"	1-1/2"	1-1/2	EVXR150SL	COMING SOON
EVXR200BL	COMING SOON	2" STD VALVE	250	2"	1-1/2"	1-1/2	EVXR200SL	COMING SOON
EVXR220BL	COMING SOON	2" FP VALVE	150	2"	2"	1-1/2	EVXR220SL	COMING SOON

(866)775-8089
FAX (701)775-8217

ELECTRIC BALL VALVES

*12-volt DC operated
*316 stainless steel ball & stem
*Fiberglass reinforced polypropylene

*Open/Closed indicator
*stainless steel hardware

ON/OFF & REGULATING

MEVX ON/OFF WELDED/BOLTED ELECTRIC VALVE								
WELDED					OPENING	RESPONSE	BOLTED	
PART#	PRICE	DESCRIPTION	MAX PSI	PIPE SIZE	THRU BALL	TIME IN SECONDS	PART#	PRICE
MEVX100	440.92 **A**	1" FP VALVE	300	1"	1"	3/4	MEVX101	440.92 **A**
MEVX200	646.32 **A**	2" STD VALVE	300/250	2"	1-1/2"	1-1/2	MEVX201	646.32 **A**
MEVX220	682.22 **A**	2" FP VALVE	250/150	2"	2"	1-1/2	MEVX221	682.22 **A**
MEVX300	1,240.56 **A**	3" FP VALVE	150	3"	3"	3		
MEVX REGULATING WELDED/BOLTED ELECTRIC VALVE								
WELDED					OPENING	RESPONSE	BOLTED	
PART#	PRICE	DESCRIPTION	MAX PSI	PIPE SIZE	THRU BALL	TIME IN SECONDS	PART#	PRICE
MEVXR100	440.92 **A**	1" FP VALVE	300	1"	1"	4	MEVXR101	440.92 **A**
MEVXR200	646.32 **A**	2" STD VALVE	300/250	2"	1-1/2"	4	MEVXR201	COMING SOON
MEVXR220	682.22 **A**	2" FP VALVE	250/150	2"	2"	4	MEVXR221	648.50 **A**
MEVXR300	1,240.56 **A**	3" FP VALVE	150	3"	3"	4		

BOTTOM & SIDE LOAD

MEVX BOTTOM/SIDE LOAD ELECTRIC VALVE								
BOTTOM LOAD					OPENING	RESPONSE	SIDE LOAD	
PART#	PRICE	DESCRIPTION	MAX PSI	PIPE SIZE	THRU BALL	TIME IN SECONDS	PART#	PRICE
MEVX100BL	495.50 **A**	1" FP VALVE	300	1"	1"	3/4	MEVX100SL	495.50 **A**
MEVX200BL	715.24 **A**	2" STD VALVE	250	2"	1-1/2"	1-1/2	MEVX200SL	715.24 **A**
MEVX220BL	768.40 **A**	2" FP VALVE	125	2"	2"	1-1/2	MEVX220SL	768.40 **A**
MEVX300BL	1,364.62 **A**	3" FP VALVE	200	3"	3"	3		
MEVX BOTTOM/SIDE LOAD REGULATING ELECTRIC VALVE								
BOTTOM LOAD					OPENING	RESPONSE	SIDE LOAD	
PART#	PRICE	DESCRIPTION	MAX PSI	PIPE SIZE	THRU BALL	TIME IN SECONDS	PART#	PRICE
MEVXR100BL	COMING SOON	1" FP VALVE	300	1"	1"	3/4	MEVXR100SL	495.50 **A**
MEVXR200BL	COMING SOON	2" STD VALVE	300	2"	1-1/2"	1-1/2	MEVXR200SL	697.80 **A**
MEVXR220BL	COMING SOON	2" FP VALVE	250	2"	2"	1-1/2	MEVXR220SL	749.66 **A**
MEVXR300BL	COMING SOON	3" STD VALVE	150	3"	3"	3		

MEVX 1" ON/OFF WELDED/BOLTED BANKED ELECTRIC VALVES

WELDED			MAX	FLANGE INLET	FLANGE OUTLET	BOLTED	
PART#	PRICE	DESCRIPTION	PSI	SIZE	SIZE	PART#	PRICE
MEVX102	962.88 **A**	1" FP 2 BANK	300	2"	1"	MEVX1012	962.88 **A**
MEVX103	1,444.32 **A**	1" FP 3 BANK	300	2"	1"	MEVX1013	1,472.04 **A**

QUICK TEEJET CAPS & GASKETS

	PART# TOP CAP & GASKET BOTTOM CAP ONLY		COMPATIBLE TIPS	PRICE
	OLD	CURRENT		
	25612-X-NYR CP25611-X-NY	114441-X-CELR CP114440-X-CE	TP Standard (0067-01), XR (01-08) DG, TT, TTJ60, AIXR, OC	1.59 **V** 1.13 **V**
		25610-X-NYR CP25609-X-NY	TP Standard (10-20), XR (10-15)	1.79 **V** 1.30 **V**
	25598-X-NYR CP25597-X-NY	114443-X-CELR CP114442-X-CE	TJ60, AI & AIUB, SJ3, DG TwinJet) TTI, AITTJ60 (02-06)	1.79 **V** 1.30 **V**
		98579-1-NYR CP98578-1-NY	AI3070 & AITTJ60 (08-15)	2.95 **V** 2.13 **V**
		25600-X-NYR CP25599-X-NY	Tubo FloodJet, TK-VS FloodJet TK-VP FloodJet	1.79 **V** 1.30 **V**
	25608-X-NYR CP25607-X-NY	114445-X-CELR CP114444-X-CE	TK FloodJet, FLFullJet, TX/TXA ConeJet TG Full Cone, Hose Shank, AITXA ConeJet, Disc/Core	1.79 **V** 1.30 **V**
		QJ4676-45-1/4-NYR	45* Quick TeeJet Cap with 1/4" NPT female thread outlet	6.70 **V**
		QJ4676-90-1/4-NYR	90* Quick TeeJet Cap with 1/8" NPT female thread outlet	6.70 **V**
		QJ4676-1/8-NYR	1/8" NPT female thread outlet	3.54 **V**
		QJ4676-1/4-NYR	1/4" NPT female thread outlet	3.54 **V**
	19843-NYR	114447-1-CELR	Shutoff Cap	3.38 **V**
		CP19438-EPR	Gasket (EPDM)	0.80 **V**
		CP19438-VI	Gasket (Viton)	3.18 **V**
		CP18999-EPR	Gasket (EPDM) Disc/Core	1.67 **V**
		CP18999-VI	Gasket (Viton) Disc/Core	10.03 **V**

NUMBER	COLOR
1	BLACK
2	WHITE
3	RED
4	BLUE
5	GREEN
6	YELLOW
7	BROWN
8	ORANGE
10	VIOLET

ADD THE FOLLOWING NUMBER TO THE END OF THE CAP & GASKET PART NUMBER TO SPECIFY COLOR NEEDED.

EXAMPLE:
CAP & GASKET IN RED
25612-3

QUICK TEE-JET CAP

SEAT GASKET
CP19438-EPR
(EPDM STANDARD)
CP19438-VI
(VITON OPTIONAL)

QUICK TEE-JET CAP & GASKET SET

(866)775-8089
FAX (701)775-8217

QJ-VR & PTC-VR
VARIABLE RATE FERTILIZER ASSEMBLIES

FEATURES:
* Both QJ-VR and PTC-VR are ideal for installation on planters and toolbars for liquid fertilizer metering and applications.
* PTC-VR - nylon construction for excellent strength and chemical resistance.
* QJ-VR - acetal and nylon construction with choice of nylon or stainless steel hose barbs for strength and excellent chemical resistance.
* Simple, elastomer (EPDM) variable orifice for reliable, long-term operation.
* Recommended operating pressure: 10-100 PSI (0.7-7.0 bar).

SIZE OPTIONS

	Hose Size (I.D.)				Tubing Size (O.D.)		
Model	1/4"	5/16"	3/8"	1/2"	1/4"	5/16"	3/8"
QJ-VR-X0.5	X	X	X				
QJ-VR-X1.0	X	X	X				
QJ-VR-X2.0			X	X			
PTC-VR-X0.5					X	X	X
PTC-VR-X1.0					X	X	X
PTC-VR-X2.0						X	X

Note: 1/4" and 5/16" hose barb sizes offered in stainless steel only.
3/8" and 1/2" hose barbs offered in choice of stainless steel or nylon.

PTC-VR PUSH-TO-CONNECT METERING ASSEMBLY
$32.87 D

Assembly	Liquid Pressure in PSI	Capacity 1 Nozzle in GPM	GPA for 20" Spacing (water)							
			4 MPH	5 MPH	6 MPH	8 MPH	10 MPH	12 MPH	16 MPH	20 MPH
QJ-VR-X0.5 & PTC-VR-X0.5	10	0.09	6.7	5.3	4.5	3.3	2.7	2.2	1.7	1.3
	20	0.13	9.7	7.7	6.4	4.8	3.9	3.2	2.4	1.9
	30	0.17	12.6	10.1	8.4	6.3	5.0	4.2	3.2	2.5
	40	0.21	15.6	12.5	10.4	7.8	6.2	5.2	3.9	3.1
	50	0.24	17.8	14.3	11.9	8.9	7.1	5.9	4.5	3.6
	60	0.29	22	17.2	14.4	10.8	8.6	7.2	5.4	4.3
	70	0.34	25	20	16.8	12.6	10.1	8.4	6.3	5.0
	80	0.40	30	24	19.8	14.9	11.9	9.9	7.4	5.9
	90	0.46	34	27	23	17.1	13.7	11.4	8.5	6.8
	100	0.54	40	32	27	20	16.0	13.4	10.0	8.0
QJ-VR-X1.0 & PTC-VR-X1.0	10	0.13	9.7	7.7	6.4	4.8	3.9	3.2	2.4	1.9
	20	0.21	15.6	12.5	10.4	7.8	6.2	5.2	3.9	3.1
	30	0.28	21	16.6	13.9	10.4	8.3	6.9	5.2	4.2
	40	0.35	26	21	17.3	13.0	10.4	8.7	6.5	5.2
	50	0.44	33	26	22	16.3	13.1	10.9	8.2	6.5
	60	0.53	39	31	26	19.7	15.7	13.1	9.8	7.9
	70	0.64	48	38	32	24	19.0	15.8	11.9	9.5
	80	0.77	57	46	38	29	23	19.1	14.3	11.4
	90	0.90	67	53	45	33	27	22	16.7	13.4
	100	1.03	76	61	51	38	31	25	19.1	15.3
QJ-VR-X2.0 & PTC-VR-X2.0	10	0.38	28	23	18.8	14.1	11.3	9.4	7.1	5.6
	20	0.57	42	34	28	21	16.9	14.1	10.6	8.5
	30	0.73	54	43	36	27	22	18.1	13.6	10.8
	40	0.87	65	52	43	32	26	22	16.1	12.9
	50	1.03	76	61	51	38	31	25	19.1	15.3
	60	1.20	89	71	59	45	36	30	22	17.8
	70	1.40	104	83	69	52	42	35	26	21
	80	1.61	120	96	80	60	48	40	30	24
	90	1.84	137	109	91	68	55	46	34	27
	100	2.07	154	123	102	77	61	51	38	31

QJ-VR METERING ASSEMBLY

Less Hose Barb $28.28 D

QJ-VR HOSE BARB METERING ASSEMBLY

Stainless Hose Barb $55.94 D
Nylon Hose Barb $33.93 D

SPRAY TIPS

VISIFLO FLAT SPRAY TIP

***Always verify tips or orifices you received are the size which you require before using with chemical.
Chemical rates need to be obtained from your chemical dealer.***

USE A MINIMUM OF 30 PSI SPRAY PRESSURE FOR UNIFORM DISTRIBUTION. THIS PROVIDES MEDIUM SIZE DROPLETS FOR GOOD SOIL COVERAGE AS A PRE-EMERGE SURFACE APPLICATION. FOR POST-EMERGE CONTACT HERBICIDES USE 40 PSI AND HIGHER PRESSURE TO PROVIDE GOOD CANOPY PENETRATION AND SMALLER DROPLETS FOR FOLIAR COVERAGE. ADJUST HEIGHT FOR 30% OVERLAP.

GOOD SPRAY PENETRATION
UNIFORM COVERAGE
SPRAY PRESSURE 30 TO 60 PSI

MATERIAL CODE	DESCRIPTION	PRICE
VS	VISIFLO SS	7.65 **D**
VP	VISIFLO POLY	1.13 **D**
HSS	HARDENED SS	18.10 **D**
SS	SS	13.15 **D**
	BRASS	5.15 **D**

HOW TO ORDER:
TP8002VS - Stainless Steel with VisiFlo color-coding
TP11002-VP - Polymer with VisiFlo color-coding
TP11002-HSS - Hardened Stainless Steel
TP8002-SS - Stainless Steel
TP8002 - Brass

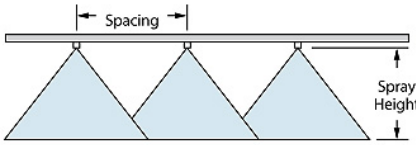

OPTIMUM SPRAY HEIGHT	
65˚	35”
80˚	30”
110˚	20”

*AVAILABLE IN: BRASS, STAINLESS STEEL & HARDENED STAINLESS **ONLY**

	PSI	GPM	GPA 20" SPACING AT MPH							
			4	5	6	8	10	12	15	20
TP650050*	30	0.043	3.2	2.6	2.1	1.6	1.3	1.1	0.85	0.64
TP800050*	35	0.047	3.5	2.8	2.3	1.7	1.4	1.2	0.93	0.7
TP1100050*	40	0.050	3.7	3	2.5	1.9	1.5	1.2	0.99	0.74
(100)	50	0.056	4.2	3.3	2.8	2.1	1.7	1.4	1.1	0.83
	60	0.061	4.5	3.6	3	2.3	1.8	1.5	1.2	0.91
TP650067*	30	0.058	4.3	3.4	2.9	2.2	1.7	1.4	1.1	0.9
TP800067*	35	0.063	4.7	3.7	3.1	2.3	1.9	1.6	1.2	0.9
TP1100067*	40	0.067	5.0	4.0	3.3	2.5	2.0	1.7	1.3	1.0
(100)	50	0.075	5.6	4.5	3.7	2.8	2.2	1.9	1.5	1.1
	60	0.082	6.1	4.9	4.1	3.0	2.4	2.0	1.6	1.2
TP6501*	30	0.087	6.5	5.2	4.3	3.2	2.6	2.2	1.7	1.3
TP8001	35	0.094	7.0	5.6	4.7	3.5	2.8	2.3	1.9	1.4
TP11001	40	0.10	7.4	5.9	5.0	3.7	3.0	2.5	2.0	1.5
(100)	50	0.11	8.2	6.5	5.4	4.1	3.3	2.7	2.2	1.6
ORANGE	60	0.12	8.9	7.1	5.9	4.5	3.6	3.0	2.4	1.8
TP65015*	30	0.13	9.7	7.7	6.4	4.8	3.9	3.2	2.6	1.9
TP80015	35	0.14	10.4	8.3	6.9	5.2	4.2	3.5	2.8	2.1
TP110015	40	0.15	11.1	8.9	7.4	5.6	4.5	3.7	3.0	2.2
(100)	50	0.17	12.6	10.1	8.4	6.3	5.0	4.2	3.4	2.5
GREEN	60	0.18	13.4	10.7	8.9	6.7	5.3	4.5	3.6	2.7
TP6502*	30	0.17	12.6	10.1	8.4	6.3	5.0	4.2	3.4	2.5
TP8002	35	0.19	14.1	11.3	9.4	7.1	5.6	4.7	3.8	2.8
TP11002	40	0.2	14.9	11.9	9.9	7.4	5.9	5.0	4.0	3.0
(50)	50	0.22	16.3	13.1	10.9	8.2	6.5	5.4	4.4	3.3
YELLOW	60	0.24	17.8	14.3	11.9	8.9	7.1	5.9	4.8	3.6
TP6503*	30	0.26	19.3	15.4	12.9	9.7	7.7	6.4	5.1	3.9
TP8003	35	0.28	21	16.6	13.9	10.4	8.3	6.9	5.5	4.2
TP11003	40	0.3	22	17.8	14.9	11.1	8.9	7.4	5.9	4.5
(50)	50	0.34	25	20	16.8	12.6	10.1	8.4	6.7	5.0
BLUE	60	0.37	27	22	18.3	13.7	11.0	9.2	7.3	5.5
TP6504*	30	0.35	26	21	17.3	13.0	10.4	8.7	6.9	5.2
TP8004	35	0.37	27	22	18.3	13.7	11.0	9.2	7.3	5.5
TP11004	40	0.4	30	24	19.8	14.9	11.9	9.9	7.9	5.9
(50)	50	0.45	33	27	22	16.7	13.4	11.1	8.9	6.7
RED	60	0.49	36	29	24	18.2	14.6	12.1	9.7	7.3
TP6505*	30	0.43	32	26	21	16.0	12.8	10.6	8.5	6.4
TP8005	35	0.47	35	28	23	17.4	14.0	11.6	9.3	7.0
TP11005	40	0.5	37	30	25	18.6	14.9	12.4	9.9	7.4
(50)	50	0.56	42	33	28	21	16.6	13.9	11.1	8.3
BROWN	60	0.61	45	36	30	23	18.1	15.1	12.1	9.1
TP6506*	30	0.52	39	31	26	19.3	15.4	12.9	10.3	7.7
TP8006	35	0.56	42	33	28	21	16.6	13.9	11.1	8.3
TP11006	40	0.6	45	36	30	22	17.8	14.9	11.9	8.9
(50)	50	0.67	50	40	33	25	19.9	16.6	13.3	9.9
GRAY	60	0.73	54	43	36	27	22	18.1	14.5	10.8
TP6508*	30	0.69	51	41	34	26	20	17.1	13.7	10.2
TP8008	35	0.75	56	45	37	28	22	18.6	14.9	11.1
TP11008	40	0.8	59	48	40	30	24	19.8	15.8	11.9
(50)	50	0.89	66	53	44	33	26	22	17.6	13.2
WHITE	60	0.98	73	58	49	36	29	24	19.4	14.6
	30	0.87	65	52	43	32	26	22	17.2	12.9
TP6510*	35	0.94	70	56	47	35	28	23	18.6	14
TP8010*	40	1	74	59	50	37	30	25	19.8	14.9
TP11010*	50	1.12	83	67	55	42	33	28	22	16.6
	60	1.22	91	72	60	45	36	30	24	18.1
	30	1.3	97	77	64	48	39	32	26	19.3
TP6515*	35	1.4	104	83	69	52	42	35	28	21
TP8015*	40	1.5	111	89	74	56	45	37	30	22
TP11015*	50	1.68	125	100	83	62	50	42	33	25
	60	1.84	137	109	91	68	55	46	36	27
	30	1.73	128	103	86	64	51	43	34	26
TP6520*	35	1.87	139	111	93	69	56	46	37	28
TP8020*	40	2	149	119	99	74	59	50	40	30
TP11020*	50	2.24	166	133	111	83	67	55	44	33
	60	2.45	182	146	121	91	73	61	49	36

(866)775-8089
FAX (701)775-8217

XR EXTENDED RANGE FLAT SPRAY TIP

TeeJet Technologies

Always verify tips or orifices you received are the size which you require before using with chemical. Chemical rates need to be obtained from your chemical dealer.

AN EXCELLENT TIP FOR PRE-EMERGE SURFACE APPLIED CHEMICALS. AT MEDIUM PRESSURE (20-30 PSI) THE XR PRODUCES A MEDIUM SIZE DROPLET FOR GOOD SURFACE COVERAGE. EXCELLENT FOR POST-EMERGE SYSTEMIC HERBICIDES. AT LOWER PRESSURES (15-20 PSI) THE XR PRODUCES A LARGER DROPLET FOR LESS DRIFT.

MATERIAL		XR	XRC
CODE	DESCRIPTION	PRICE	PRICE
VS	VISIFLO SS	8.55 **D**	9.82 **D**
SS	STAINLESS	10.14 **D**	N/A
VP	POLYMER	3.87 **D**	4.59 **D**
VK	CERAMIC VISIFLO	6.62 **D**	8.00 **D**

PART # 80 DEGREE	110 DEGREE	PSI	XR GPM	XRC GPM	GPA 20" SPACING AT MPH 4	5	6	8	10	12	15	20
		15	0.061		4.5	3.6	3	2.3	1.8	1.5	1.2	0.91
		20	0.071		5.3	4.2	3.5	2.6	2.1	1.8	1.4	1.1
XR8001	XR11001	30	0.087		6.5	5.2	4.3	3.2	2.6	2.2	1.7	1.3
(100)	(100)	40	0.1		7.4	5.9	5	3.7	3	2.5	2	1.5
ORANGE	ORANGE	50	0.11		8.2	6.5	5.4	4.1	3.3	2.7	2.2	1.6
		60	0.12		8.9	7.1	5.9	4.5	3.6	3	2.4	1.8
		15	0.092	0.092	6.8	5.5	4.6	3.4	2.7	2.3	1.8	1.4
XR80015	XR110015	20	0.11	0.11	8.2	6.5	5.4	4.1	3.3	2.7	2.2	1.6
XRC80015	XRC110015	30	0.13	0.13	9.7	7.7	6.4	4.8	3.9	3.2	2.6	1.9
(100)	(100)	40	0.15	0.15	11.1	8.9	7.4	5.6	4.5	3.7	3	2.2
GREEN	GREEN	50	0.17	0.17	12.6	10.1	8.4	6.3	5	4.2	3.4	2.5
		60	0.18	0.18	13.4	10.7	8.9	6.7	5.3	4.5	3.6	2.7
		15	0.12	0.12	8.9	7.1	5.9	4.5	3.6	3	2.4	1.8
XR8002	XR11002	20	0.14	0.14	10.4	8.3	6.9	5.2	4.2	3.5	2.8	2.1
XRC8002	XRC11002	30	0.17	0.17	12.6	10.1	8.4	6.3	5	4.2	3.4	2.5
(50)	(50)	40	0.2	0.2	14.9	11.9	9.9	7.4	5.9	5	4.1	3
YELLOW	YELLOW	50	0.22	0.22	16.3	13.1	10.9	8.2	6.5	5.4	4.4	3.3
		60	0.24	0.24	17.8	14.3	11.9	8.9	7.1	5.9	4.8	3.6
		15	0.15	0.15	11.1	8.9	7.4	5.6	4.5	3.7	3	2.2
	XR110025	20	0.18	0.18	13.4	10.7	8.9	6.7	5.3	4.5	3.6	2.7
	XRC110025	30	0.22	0.22	16.3	13.1	10.9	8.2	6.5	5.4	4.4	3.3
	(50)	40	0.25	0.25	18.6	14.9	12.4	9.3	7.4	6.2	5	3.7
	VIOLET	50	0.28	0.28	21	16.6	13.9	10.4	8.3	6.9	5.5	4.2
		60	0.31	0.31	23	18.4	15.3	11.5	9.2	7.7	6.1	4.6
		15	0.18	0.18	13.4	10.7	8.9	6.7	5.3	4.5	3.6	2.7
XR8003	XR11003	20	0.21	0.21	15.6	12.5	10.4	7.8	6.2	5.2	4.2	3.1
XRC8003	XRC11003	30	0.26	0.26	19.3	15.4	12.9	9.7	7.7	6.4	5.1	3.9
(50)	(50)	40	0.3	0.3	22	17.8	14.9	11.1	8.9	7.4	5.9	4.5
BLUE	BLUE	50	0.34	0.34	25	20	16.8	12.6	10.1	8.4	6.7	5
		60	0.37	0.37	27	22	18.3	13.7	11	9.2	7.3	5.5
		15	0.24	0.24	17.8	14.3	11.9	8.9	7.1	5.9	4.8	3.6
XR8004	XR11004	20	0.28	0.28	21	16.6	13.9	10.4	8.3	6.9	5.5	4.2
XRC8004	XRC11004	30	0.35	0.35	26	21	17.3	13	10.4	8.7	6.9	5.2
(50)	(50)	40	0.4	0.4	30	24	19.8	14.9	11.9	9.9	7.9	5.9
RED	RED	50	0.45	0.45	33	27	22	16.7	13.4	11.1	8.9	6.7
		60	0.49	0.49	36	29	24	18.2	14.6	12.1	9.7	7.3
		15	0.31	0.31	23	18.4	15.3	11.5	9.2	7.7	6.1	4.6
XR8005	XR11005	20	0.35	0.35	26	21	17.3	13	10.4	8.7	6.9	5.2
XRC8005	XRC11005	30	0.43	0.43	32	26	21	16	12.8	10.6	8.5	6.4
(50)	(50)	40	0.5	0.5	37	30	25	18.6	14.9	12.4	9.9	7.4
BROWN	BROWN	50	0.56	0.56	42	33	28	21	16.6	13.9	11.1	8.3
		60	0.61	0.61	45	36	30	23	18.1	15.1	12.1	9.1
		15	0.37	0.7	27	22	18.3	13.7	11	9.2	7.3	5.5
XR8006	XR11006	20	0.42	0.42	31	25	21	15.6	12.5	10.4	8.3	6.2
XRC8006	XRC11006	30	0.52	0.52	39	31	26	19.3	15.4	12.9	10.3	7.7
(50)	(50)	40	0.6	0.6	45	36	30	22	17.8	14.9	11.9	8.9
GRAY	GRAY	50	0.67	0.67	50	40	33	25	19.9	16.6	13.3	9.9
		60	0.73	0.73	54	43	36	27	22	18.1	14.5	10.8
		15	0.49	0.49	36	29	24	18.2	14.6	12.1	9.7	7.3
XR8008	XR11008	20	0.57	0.57	42	34	28	21	16.9	14.1	11.3	8.5
XRC8008	XRC11008	30	0.69	0.69	51	41	34	26	20	17.1	13.7	10.2
(50)	(50)	40	0.8	0.8	59	48	40	30	24	19.8	15.8	11.9
WHITE	WHITE	50	0.89	0.89	66	53	44	33	26	22	17.6	13.2
		60	0.98	0.98	73	58	49	36	29	24	19.4	14.6
		15	0.61		45	36	30	23	18.1	15.1	12.1	9.1
		20	0.71		53	42	35	26	21	17.6	14.1	10.5
XR8010SS	XR11010SS	30	0.87		65	52	43	32	26	22	17.2	12.9
		40	1		74	59	50	37	30	25	19.8	14.9
		50	1.12		83	67	55	42	33	28	22	16.6
		60	1.22		91	72	60	45	36	30	24	18.1
		15	0.92		68	55	46	34	27	23	18.2	13.7
		20	1.06		79	63	52	39	31	26	21	15.7
XR8015SS	XR11015SS	30	1.3		97	77	64	48	39	32	26	19.3
		40	1.5		111	89	74	56	45	37	30	22
		50	1.68		125	100	83	62	50	42	33	25
		60	1.84		137	109	91	68	55	46	36	27

XR

XRC

AIXR AIR INDUCTION XR FLAT SPRAY TIP

Always verify tips or orifices you received are the size which you require before using with chemical. Chemical rates need to be obtained from your chemical dealer.

Tapered flat spray angle with air induction technology offers better drift management. Made of two-piece UHMWPE polymer construction providing excellent chemical resistance, including acids, as well as exceptional wear life.
Depending on the chemical, produces large air-filled drops through a Venturi air aspirator. Removable pre-orifice.

AIXR110XXVP
$8.90 D

OPTIMUM SPRAY HEIGHT	
110˚	20”

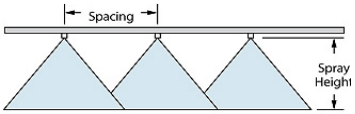

PART# 110 DEGREE	PSI	GPM	GPA 20" SPACING AT MPH 4	5	6	8	10	12	15	20
AIXR110015 (100) GREEN	15	0.092	6.8	5.5	4.6	3.4	2.7	2.3	1.8	1.4
	20	0.11	8.2	6.5	5.4	4.1	3.3	2.7	2.2	1.6
	30	0.13	9.7	7.7	6.4	4.8	3.9	3.2	2.6	1.9
	40	0.15	11.1	8.9	7.4	5.6	4.5	3.7	3	2.2
	40	0.17	12.6	10.1	8.4	6.3	5	4.2	3.4	2.5
	60	0.18	13.4	10.7	8.9	6.7	5.3	4.5	3.6	2.7
	75	0.21	15.6	12.5	10.4	7.8	6.2	5.2	4.2	3.1
	90	0.23	17.1	13.7	11.4	8.5	6.8	5.7	4.6	3.4
AIXR11002 (50) YELLOW	15	0.12	8.9	7.1	5.9	4.5	3.6	3	2.4	1.8
	20	0.14	10.4	8.3	6.9	5.2	4.2	3.5	2.8	2.1
	30	0.17	12.6	10.1	8.4	6.3	5	4.2	3.4	2.5
	40	0.20	14.9	11.9	9.9	7.4	5.9	5	4	3
	50	0.22	16.3	13.1	10.9	8.2	6.5	5.4	4.4	3.3
	60	0.24	17.8	14.3	11.9	8.9	7.1	5.9	4.8	3.6
	75	0.27	20	16	13.4	10	8	6.7	5.3	4
	90	0.30	22	17.8	14.9	11.1	8.9	7.4	5.9	4.5
AIXR110025 (50) PURPLE	15	0.15	11.1	8.9	7.4	5.6	4.5	3.7	3	2.2
	20	0.18	13.4	10.7	8.9	6.7	5.3	4.5	3.6	2.7
	30	0.22	16.3	13.1	10.9	8.2	6.5	5.4	4.4	3.3
	40	0.25	18.6	14.9	12.4	9.3	7.4	6.2	5	3.7
	50	0.28	21	16.6	13.9	10.4	8.3	6.9	5.5	4.2
	60	0.31	23	18.4	15.3	11.5	9.2	7.7	6.1	4.6
	75	0.34	25	20	16.8	12.6	10.4	8.4	6.7	5
	90	0.38	28	23	18.8	14.1	11.3	9.4	7.5	5.6
AIXR11003 (50) BLUE	15	0.18	13.4	10.7	8.9	6.7	5.3	4.5	3.6	2.7
	20	0.21	15.6	12.5	10.4	7.8	6.2	5.2	4.2	3.1
	30	0.26	19.3	15.4	12.9	9.7	7.7	6.4	5.1	3.9
	40	0.30	22	17.8	14.9	11.1	8.9	7.4	5.9	4.5
	50	0.34	25	20	16.8	12.6	10.1	8.4	6.7	5
	60	0.37	27	22	18.3	13.7	11	9.2	7.3	5.5
	75	0.41	30	24	20	15.2	12.2	10.1	8.1	6.1
	90	0.45	33	27	22	16.7	13.4	11.1	8.9	6.7
AIXR11004 (50) RED	15	0.24	17.8	14.3	11.9	8.9	7.1	5.9	4.8	3.6
	20	0.28	21	16.6	13.9	10.4	8.3	6.9	5.5	4.2
	30	0.35	26	21	17.3	13	10.4	8.7	6.9	5.2
	40	0.40	30	24	19.8	14.9	11.9	9.9	7.9	5.9
	50	0.45	33	27	22	16.7	13.4	11.1	8.9	6.7
	60	0.49	36	29	24	18.2	14.6	12.1	9.7	7.3
	75	0.55	41	33	27	20	16.3	13.6	10.9	8.2
	90	0.60	51	36	30	22	17.8	14.9	11.9	8.9
AIXR11005 (50) BROWN	15	0.31	23	18.4	15.3	11.5	9.2	7.7	6.1	4.6
	20	0.35	26	21	17.3	13	10.4	8.7	6.9	5.2
	30	0.43	32	26	21	16	12.8	10.6	8.5	6.4
	40	0.50	37	30	25	18.6	14.9	12.4	9.9	7.4
	50	0.56	42	33	28	21	16.6	13.9	11.1	8.3
	60	0.61	45	36	30	23	18.1	15.1	12.1	9.1
	75	0.68	50	40	34	25	20	16.8	13.5	10.1
	90	0.75	56	45	37	28	22	18.6	14.9	11.1
AIXR11006 (50) GRAY	15	0.37	27	22	18.3	13.7	11	9.2	7.3	5.5
	20	0.42	31	25	21	15.6	12.5	10.4	8.3	6.2
	30	0.52	39	31	26	19.3	15.4	12.9	10.3	7.7
	40	0.60	45	36	30	22	17.8	14.9	11.9	8.9
	50	0.67	50	40	33	25	19.9	16.6	13.3	9.9
	60	0.73	54	43	36	27	22	18.1	14.5	1.8
	75	0.82	61	49	41	30	24	20	16.2	12.2
	90	0.90	67	53	45	33	27	22	17.8	13.4

(866)775-8089
FAX (701)775-8217

TURBO, TURBO INDUCTION & TURBO TWINJET

Always verify tips or orifices you received are the size which you require before using with chemical. Chemical rates need to be obtained from your chemical dealer.

TURBO TEEJET: TAPERED EDGE WIDE ANGLE FLAT SPRAY PATTERN FOR UNIFORM COVERAGE IN BROADCAST SPRAYING. BLOCKAGE-FREE PASSAGE MEANS LESS CLOGGING.
TURBO INDUCTION: AIR INDUCTION, TAPERED FLAT SPRAY TIP PATTERN, MINIMAL PLUGGING. IDEAL FOR USE WITH AUTOMATIC SPRAYER CONTROLLERS.
TURBO TWINJET: BEST SUITED FOR BROADCAST SPRAYING WHERE SUPERIOR LEAF COVERAGE AND CANOPY PENETRATION IS IMPORTANT.

		TT	TTI	TTJ60	GPA 20" SPACING AT MPG							
110 DEGREE	PSI	GPM	GPM	GPM	4	5	6	8	10	12	15	20
	15	0.061			4.5	3.6	3	2.3	1.8	1.5	1.2	0.91
	20	0.071			5.3	4.2	3.5	2.6	2.1	1.8	1.4	1.1
TT11001	30	0.087			6.5	5.2	4.3	3.2	2.6	2.2	1.7	1.3
(100)	40	0.1			7.4	5.9	5	3.7	3	2.5	2	1.5
ORANGE	50	0.11			8.2	6.5	5.4	4.1	3.3	2.7	2.2	1.6
	60	0.12			8.9	7.1	5.9	4.5	3.6	3	2.4	1.8
	15	0.092	0.092		6.8	5.5	4.6	3.4	2.7	2.3	1.8	1.4
TT110015	20	0.11	0.11		8.2	6.5	5.4	4.1	3.3	2.7	2.2	1.6
TTI110015	30	0.13	0.13		9.7	7.7	6.4	4.8	3.9	3.2	2.6	1.9
(100)	40	0.15	0.15		11.1	8.9	7.4	5.6	4.5	3.7	3	2.2
GREEN	50	0.17	0.17		12.6	10.1	8.4	6.3	5	4.2	3.4	2.5
	60	0.18	0.18		13.4	10.7	8.9	6.7	5.3	4.5	3.6	2.7
TT11002	15	0.12	0.12		8.9	7.1	5.9	4.5	3.6	3	2.4	1.8
TTI11002	20	0.14	0.14	0.14	10.4	8.3	6.9	5.2	4.2	3.5	2.8	2.1
(50)	30	0.17	0.17	0.17	12.6	10.1	8.4	6.3	5	4.2	3.4	2.5
TTJ60-11002	40	0.20	0.2	0.2	14.9	11.9	9.9	7.4	5.9	5	4	3
(100)	50	0.22	0.22	0.22	16.3	13.1	10.9	8.2	6.5	5.4	4.4	3.3
YELLOW	60	0.24	0.24	0.24	17.8	14.3	11.9	8.9	7.1	5.9	4.8	3.6
TT110025	15	0.15	0.15		11.1	8.9	7.4	5.6	4.5	3.7	3	2.2
TTI110025	20	0.18	0.18	0.18	13.4	10.7	8.9	6.7	5.3	4.5	3.6	2.7
(50)	30	0.22	0.22	0.22	16.3	13.1	10.9	8.2	6.5	5.4	4.4	3.3
TTJ60-110025	40	0.25	0.25	0.25	18.6	14.9	12.4	9.3	7.4	6.2	5	3.7
(100)	50	0.28	0.28	0.28	21	16.6	13.9	10.4	8.3	6.9	5.5	4.2
VIOLET	60	0.31	0.31	0.31	23	18.4	15.3	11.5	9.2	7.7	6.1	4.6
TT11003	15	0.18	0.18		13.4	10.7	8.9	6.7	5.3	4.5	3.6	2.7
TTI11003	20	0.21	0.21	0.21	15.6	12.5	10.4	7.8	6.2	5.2	4.2	3.1
(50)	30	0.26	0.26	0.26	19.3	15.4	12.9	9.7	7.7	6.4	5.1	3.9
TTJ60-11003	40	0.30	0.3	0.3	22	17.8	14.9	11.1	8.9	7.4	5.9	4.5
(100)	50	0.34	0.34	0.34	25	20	16.8	12.6	10.1	8.4	6.7	5
BLUE	60	0.37	0.37	0.37	27	22	18.3	13.7	11	9.2	7.3	5.5
TT11004	15	0.24	0.24		17.8	14.3	11.9	8.9	7.1	5.9	4.8	3.6
TTI11004	20	0.28	0.28	0.28	21	16.6	13.9	10.4	8.3	6.9	5.5	4.2
(50)	30	0.35	0.35	0.35	26	21	17.3	13	10.4	8.7	6.9	5.2
TTJ60-11004	40	0.40	0.4	0.4	30	24	19.8	14.9	11.9	9.9	7.9	5.9
(100)	50	0.45	0.45	0.45	33	27	22	16.7	13.4	11.1	8.9	6.7
RED	60	0.49	0.49	0.49	36	29	24	18.2	14.6	12.1	9.7	7.3
TT11005	15	0.31	0.31		23	18.4	15.3	11.5	9.2	7.7	6.1	4.6
TTI11005	20	0.35	0.35	0.35	26	21	17.3	13	10.4	8.7	6.9	5.2
(50)	30	0.43	0.43	0.43	32	26	21	16	12.8	10.6	8.5	6.4
TTJ60-11005	40	0.50	0.5	0.5	37	30	25	18.6	14.9	12.4	9.9	7.4
(100)	50	0.56	0.56	0.56	42	33	28	21	16.6	13.9	11.1	8.3
BROWN	60	0.61	0.61	0.61	45	36	30	23	18.1	15.1	12.1	9.1
TT11006	15	0.37	0.37		27	22	18.3	13.7	11	9.2	7.3	5.5
TTI11006	20	0.42	0.42	0.42	31	25	21	15.6	12.5	10.4	8.3	6.2
(50)	30	0.52	0.52	0.52	39	31	26	19.3	15.4	12.9	10.3	7.7
TTJ60-11006	40	0.60	0.6	0.6	45	36	30	22	17.8	14.9	11.9	8.9
(100)	50	0.67	0.67	0.67	50	40	33	25	19.9	16.6	13.3	9.9
GRAY	60	0.73	0.73	0.73	54	43	36	27	22	18.1	14.5	10.8
	15	0.49			36	29	24	18.2	14.6	12.1	9.7	7.3
TT11008	20	0.57			42	34	28	21	16.9	14.1	11.3	8.5
(50)	30	0.69			51	41	34	26	20	17.1	13.7	10.2
WHITE	40	0.80			59	48	40	30	24	19.8	15.8	11.9
	50	0.89			66	53	44	33	26	22	17.6	13.2
	60	0.98			73	58	49	36	29	24	19.4	14.6

(TT)
WIDE ANGLE
FLAT SPRAY
$8.06 **D**

(TTI)
FLAT SPRAY
(015-06) $13.78 **D**
(08-10) $16.11 **D**

(TTJ60)
TWIN FLAT SPRAY
$9.66 **D**

AIR INDUCTION SPRAY TIP

Always verify tips or orifices you received are the size which you require before using with chemical. Chemical rates need to be obtained from your chemical dealer.

STAINLESS STEEL INSERT PRODUCES TAPERED EDGE FLAT SPRAY PATTERN FOR UNIFORM COVERAGE IN BROADCAST SPRAYING. POLYMER INSERT HOLDER AND PRE-ORIFICE WITH VISIFLO COLOR-CODING. LARGER DROPLETS FOR LESS DRIFT. DEPENDING ON CHEMICAL, PRODUCES LARGE AIR-FILLED DROPS THROUGH THE USE OF A VENTURI AIR ASPIRATOR.

AI

MATERIAL CODE	DESCRIPTION	AI PRICE	AIC PRICE
VS	VISIFLO SS	16.33 **D**	17.71 **D**
VP	POLYMER	**N/A**	8.21 **D**
VK	CERAMIC VISIFLO	**N/A**	14.42 **D**

AIC

110 DEGREE	PSI	GPM	SPACING AT MPH 4	5	6	7	8	9	10	12	14	16	18	20
	30	0.13	9.7	7.7	6.4	5.5	4.8	4.3	3.9	3.2	2.8	2.4	2.1	1.9
AI110015	40	0.15	11.1	8.9	7.4	6.4	5.6	5	4.5	3.7	3.2	2.8	2.5	2.2
AIC110015	50	0.17	12.6	10.1	8.4	7.2	6.3	5.6	5	4.2	3.6	3.2	2.8	2.5
(100)	60	0.18	13.4	10.7	8.9	7.6	6.7	5.9	5.3	4.5	3.8	3.3	3	2.7
GREEN	75	0.21	15.6	12.5	10.4	8.9	7.8	6.9	6.2	5.2	4.5	3.9	3.5	3.1
	90	0.23	17.1	13.7	11.4	9.8	8.5	7.6	6.8	5.7	4.9	4.3	3.8	3.4
	30	0.17	12.6	10.1	8.4	7.2	6.3	5.6	5	4.2	3.6	3.2	2.8	2.5
AI11002	40	0.2	14.9	11.9	9.9	8.5	7.4	6.6	5.9	5	4.2	3.7	3.3	3
AIC11002	50	0.22	16.3	13.1	10.9	9.3	8.2	7.3	6.5	5.4	4.7	4.1	3.6	3.3
(50)	60	0.24	17.8	14.3	11.9	10.2	8.9	7.9	7.1	5.9	5.1	4.5	4	3.6
YELLOW	75	0.27	20	16	13.4	11.5	10	8.9	8	6.7	5.7	5	4.5	4
	90	0.3	22	17.8	14.9	12.7	11.1	9.9	8.9	7.4	6.4	5.6	5	4.5
	30	0.22	16.3	13.1	10.9	9.3	8.2	7.3	6.5	5.4	4.7	4.1	3.6	3.3
AI110025	40	0.25	18.6	14.9	12.4	10.6	9.3	8.3	7.4	6.2	5.3	4.6	4.1	3.7
AIC110025	50	0.28	21	16.6	13.9	11.9	10.4	9.2	8.3	6.9	5.9	5.2	4.6	4.2
(50)	60	0.31	23	18.4	15.3	13.2	11.5	10.2	9.2	7.7	6.6	5.8	5.1	4.6
VIOLET	75	0.34	25	20	16.8	14.4	12.6	11.2	10.1	8.4	7.2	6.3	5.6	5
	90	0.36	28	23	18.8	16.1	14.1	12.5	11.3	9.4	8.1	7.1	6.3	5.6
	30	0.26	19.3	15.4	12.9	11	9.7	8.6	7.7	6.4	5.5	4.8	4.3	3.9
AI11003	40	0.3	22	17.8	14.9	12.7	11.1	9.9	8.9	7.4	6.4	5.6	5	4.5
AIC11003	50	0.34	25	20	16.8	14.4	12.6	11.2	10.1	8.4	7.2	6.3	5.6	5
(50)	60	0.37	27	2	18.3	15.7	13.7	12.2	11	9.2	7.8	6.9	6.1	5.5
BLUE	75	0.41	30	24	20	17.4	15.2	13.5	12.2	10.1	8.7	7.6	6.8	6.1
	90	0.45	33	27	22	19.1	16.7	14.9	13.4	11.1	9.5	8.4	7.4	6.7
	30	0.35	26	21	17.3	14.9	13	11.6	10.4	8.7	7.4	6.5	5.8	5.2
AI11004	40	0.4	30	24	19.8	17	14.9	13.2	11.9	9.9	8.5	7.4	6.6	5.9
AIC11004	50	0.45	33	27	22	19.1	16.7	14.9	13.4	11.1	9.5	8.4	7.4	6.7
(50)	60	0.49	36	29	24	21	18.2	16.2	14.6	12.1	10.4	9.1	8.1	7.3
RED	75	0.55	41	33	27	23	20	18.2	16.3	13.6	11.7	10.2	9.1	8.2
	90	0.6	45	36	30	25	22	19.8	17.8	14.9	12.7	11.1	9.9	8.9
	30	0.43	32	26	21	18.2	16	14.2	12.8	10.6	9.1	8	7.1	6.4
AI11005	40	0.5	37	30	25	21	18.6	16.5	14.9	12.4	10.6	9.3	8.3	7.4
AIC11005	50	0.56	42	33	28	24	21	18.5	16.6	13.9	11.9	10.4	9.2	8.3
(50)	60	0.61	45	36	30	26	23	20	18.1	15.1	12.9	11.3	10.1	9.1
BROWN	75	0.68	50	40	34	29	25	22	20	16.8	14.4	12.6	11.2	10.1
	90	0.75	56	45	37	32	28	25	22	18.6	15.9	13.9	12.4	11.1
	30	0.52	39	31	26	22	19.3	17.2	15.4	12.9	11	9.7	8.6	7.7
AI11006	40	0.6	45	36	30	25	22	19.8	17.8	14.9	12.7	11.1	9.9	8.9
AIC11006	50	0.67	50	40	33	28	25	22	19.9	16.6	14.2	12.4	11.1	9.9
(50)	60	0.73	54	43	36	31	27	24	22	18.1	15.5	13.6	12	10.8
GRAY	75	0.82	61	49	41	35	30	27	24	20	17.4	15.2	13.5	12.2
	90	0.9	67	53	45	38	33	30	27	22	19.1	16.7	14.9	13.4
	30	0.69	51	41	34	29	26	23	20	17.1	14.6	12.8	11.4	10.2
AI11008	40	0.8	59	48	40	34	30	26	24	19.8	17	14.9	13.2	11.9
AIC11008	50	0.89	66	53	44	38	33	29	26	22	18.9	16.5	14.7	13.2
(50)	60	0.98	73	58	49	42	36	32	29	24	21	18.2	16.2	14.6
WHITE	75	1.1	82	65	54	47	41	36	33	27	23	20	18.2	16.3
	90	1.2	89	71	59	51	45	40	36	30	25	22	19.8	17.8
	30	0.87	65	52	43	37	32	29	26	22	18.5	16.1	14.4	12.9
AI11010	40	1	74	59	50	42	37	33	30	25	21	18.6	16.5	14.9
AIC11010	50	1.12	83	67	55	48	42	37	33	28	24	21	18.5	16.6
(50)	60	1.22	91	72	60	52	45	40	36	30	26	23	20	18.1
LT BLUE	75	1.37	102	81	68	58	51	45	41	34	29	25	23	20
	90	1.5	111	89	74	64	56	50	45	37	32	28	25	22

(866)775-8089
FAX (701)775-8217

DRIFT GUARD
FLAT SPRAY TIP

***Always verify tips or orifices you received are the size which you require before using with chemical.
Chemical rates need to be obtained from your chemical dealer.***

FEATURES:
PRE-ORIFICE DESIGN PRODUCES LARGER DROPLETS AND REDUCES THE SMALL DRIFT PRONE DROPLETS, MINIMIZING OFF-TARGET SPRAY CONTAMINATION.TAPERED EDGE FLAT SPRAY PATTERN PROVIDES UNIFORM COVERAGE WHEN ADJACENT NOZZLE PATTERN ARE OVERLAPPED IN BROADCAST SPRAYING THE COLOR-CODED PRE-ORIFICE IS REMOVABLE FOR ANY NECESSARY CLEANING. AVAILABLE IN BOTH 80 AND 110 DEGREE SPRAY ANGLES WITH DURABLE STAINLESS STEEL ORIFICES.

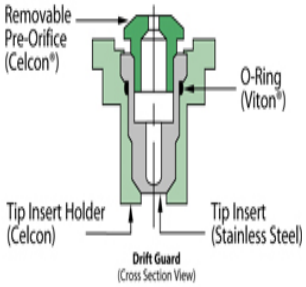

OPTIMUM SPRAY HEIGHT	
80˚	30”
110˚	20”

MATERIAL CODE	DESCRIPTION	PRICE
VS	VISIFLO SS	11.83 **D**
VP	POLYMER	7.07 **D**

80 DEGREE	110 DEGREE	PSI	GPM	GPA 20” SPACING AT MPH										
				4	5	6	7	8	9	10	12	14	16	18
DG80015 (100) GREEN	DG110015 (100) GREEN	30	0.13	9.7	7.7	6.4	5.5	4.8	4.3	3.9	3.2	2.8	2.4	2.1
		35	0.14	10.4	8.3	6.9	5.9	5.2	4.6	4.2	3.5	3	2.6	2.3
		40	0.15	11.1	8.9	7.4	6.4	5.6	5	4.5	3.7	3.2	2.8	2.5
		50	0.17	12.6	10.1	8.4	7.2	6.3	5.6	5	4.2	3.6	3.2	2.8
		60	0.18	13.4	10.7	8.9	7.6	6.7	5.9	5.3	4.5	3.8	3.3	3
DG8002 (50) YELLOW	DG11002 (50) YELLOW	30	0.17	12.6	10.1	8.4	7.2	6.3	5.6	5	4.2	3.6	3.2	2.8
		35	0.19	14.1	11.3	9.4	8.1	7.1	6.3	5.6	4.7	4	3.5	3.1
		40	0.2	14.9	11.9	9.9	8.5	7.4	6.6	5.9	5	4.2	3.7	3.3
		50	0.22	16.3	13.1	10.9	9.3	8.2	7.3	6.5	5.4	4.7	4.1	3.6
		60	0.24	17.8	14.3	11.9	10.2	8.9	7.9	7.1	5.9	5.1	4.5	4
DG8003 (50) BLUE	DG11003 (50) BLUE	30	0.26	19.3	15.4	12.9	11	9.7	8.6	7.7	6.4	5.5	4.8	4.3
		35	0.28	21	16.6	13.9	11.9	10.4	9.2	8.3	6.9	5.9	5.2	4.6
		40	0.3	22	17.8	14.9	12.7	11.1	9.9	8.9	7.4	6.4	5.6	5
		50	0.34	25	20	16.8	14.4	12.6	11.2	10.1	8.4	7.2	6.3	5.6
		60	0.37	27	2	18.3	15.7	13.7	12.2	11	9.2	7.8	6.9	6.1
DG8004 (50) RED	DG11004 (50) RED	30	0.35	26	21	17.3	14.9	13	11.6	10.4	8.7	7.4	6.5	5.8
		35	0.37	27	22	18.3	15.7	13.7	12.2	11	9.2	7.8	6.9	6.1
		40	0.4	30	24	19.8	17	14.9	13.2	11.9	9.9	8.5	7.4	6.6
		50	0.45	33	27	22	19.1	16.7	14.9	13.4	11.1	9.5	8.4	7.4
		60	0.49	36	29	24	21	18.2	16.2	14.6	12.1	10.4	9.1	8.1
DG8005 (50) BROWN	DG11005 (50) BROWN	30	0.43	32	26	21	18.2	16	14.2	12.8	10.6	9.1	8	7.1
		35	0.47	35	28	23	19.9	17.4	15.5	14	11.6	10	8.7	7.8
		40	0.5	37	30	25	21	18.6	16.5	14.9	12.4	10.6	9.3	8.3
		50	0.56	42	33	28	24	21	18.5	16.6	13.9	11.9	10.4	9.2
		60	0.61	45	36	30	26	23	20	18.1	15.1	12.9	11.3	10.1

TURBO TEEJET® DUO

Always verify tips or orifices you received are the size which you require before using with chemical. Chemical rates need to be obtained from your chemical dealer.

Excellent for both contact and systemic fungicides and insecticides - typical pressure 40 PSI and higher.
Excellent for spraying post-emergence contact herbicides - typical pressure 40 PSI and higher.
Very good for post-emerge systemic herbicide applications at lower end of optimum operating pressure range.
Offers improved penetration and coverage as compared to a single flat spray tip of equal capacity.
Offers larger droplet size and improved drift control.

Features:

Dual angled spray patterns help to better penetrate crop canopy. Provides thorough leaf coverage.
QJ90-2-NYR adapter utilizes Quick TeeJet inlet and outlet connections for fast and easy installation.
Body and caps constructed of Nylon.
Turbo TeeJet tip made of acetal for excellent wear life and chemical resistance.
Quick TeeJet caps are color coded to match VisiFlo color coding of spray tip.

DUAL OULET ONLY
QJ90-2-NYR
$6.70 V

DUAL OUTLET
W/CAP & TIPS
$29.20 V

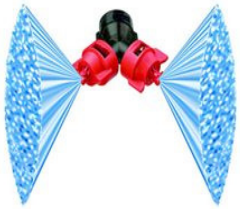

110 DEGREE	PSI	GPM	GPA 20" SPACING AT MPH 4	5	6	8	10	12	15	20
	15	0.12	8.9	7.1	5.9	4.5	3.6	3	2.4	1.8
QJ90-	20	0.14	10.4	8.3	6.9	5.2	4.2	3.5	2.8	2.1
2XTT11001-VP	30	0.17	12.6	10.1	8.4	6.3	5	4.2	3.4	2.5
(100)	40	0.2	14.9	11.9	9.9	7.4	5.9	5	4	3
ORANGE	50	0.22	16.3	13.1	10.9	8.2	6.5	5.4	4.4	3.3
	60	0.24	17.8	14.3	11.9	8.9	7.1	5.9	4.8	3.6
	15	0.18	13.4	10.7	8.9	6.7	5.3	4.5	3.6	2.7
QJ90-	20	0.21	15.6	12.5	10.4	7.8	6.2	5.2	4.2	3.1
2XTT110015-VP	30	0.26	19.3	15.4	12.9	9.7	7.7	6.4	5.1	3.9
(100)	40	0.3	22	17.8	14.9	11.1	8.9	7.4	5.9	4.5
GREEN	50	0.34	25	20	16.8	12.6	10	8.4	6.7	5
	60	0.37	27	22	18.3	13.7	11	9.2	7.3	5.5
	15	0.24	17.8	14.3	11.9	8.9	7.1	5.9	4.8	3.6
QJ90-	20	0.28	21	16.6	13.9	10.4	8.3	6.9	5.5	4.2
2XTT11002-VP	30	0.35	26	21	17.3	13	10.4	8.7	6.9	5.2
(50)	40	0.4	30	24	19.8	14.9	11.9	9.9	7.9	5.9
YELLOW	50	0.45	33	27	22	16.7	13.4	11.1	8.9	6.7
	60	0.49	36	29	24	18.2	14.6	12.1	9.7	7.3
	15	0.31	23	18.4	15.3	11.5	9.2	7.7	6.1	4.6
QJ90-	20	0.35	26	21	17.3	13	10.4	8.7	6.9	5.2
2XTT110025-VP	30	0.43	32	26	21	16	12.8	10.6	8.5	6.4
(50)	40	0.5	37	30	25	18.6	14.9	12.4	9.9	7.4
VIOLET	50	0.56	42	33	28	21	16.6	13.9	11.1	8.3
	60	0.61	45	36	30	23	18.1	15.1	12.1	9.1
	15	0.37	27	22	18.3	13.7	11	9.2	7.3	5.5
QJ90-	20	0.42	31	25	21	15.6	12.5	10.4	8.3	6.2
2XTT11003-VP	30	0.52	39	31	26	19.3	15.4	12.9	10.3	7.7
(50)	40	0.6	45	36	30	22	17.8	14.9	11.9	8.9
BLUE	50	0.67	50	40	33	25	19.9	16.6	13.3	9.9
	60	0.73	54	43	36	27	22	18.1	14.5	10.8
	15	0.49	36	29	24	18.2	14.6	12.1	9.7	7.3
QJ90-	20	0.57	42	34	28	21	16.9	14.1	11.3	8.5
2XTT11004-VP	30	0.69	51	41	34	26	20	17.1	13.7	10.2
(50)	40	0.8	59	48	40	30	24	19.8	15.8	11.9
RED	50	0.89	66	53	44	33	26	22	17.6	13.2
	60	0.98	73	58	49	36	29	24	19.4	14.6
	15	0.61	45	36	30	23	18.1	15.1	12.1	9.1
QJ90-	20	0.71	53	42	35	26	21	17.6	14.1	10.5
2XTT11005-VP	30	0.87	65	52	43	32	26	22	17.2	12.9
(50)	40	1	74	59	50	37	30	25	19.8	14.9
BROWN	50	1.12	83	67	55	42	33	28	22	16.6
	60	1.22	91	72	60	45	36	30	24	18.1
	15	0.73	54	43	36	27	22	18.1	14.5	10.8
QJ90-	20	0.85	63	50	42	32	25	21	16.8	12.6
2XTT11006-VP	30	1.04	77	62	51	39	31	26	21	15.4
(50)	40	1.2	89	71	59	45	36	30	24	17.8
GRAY	50	1.34	99	80	66	50	40	33	27	19.9
	60	1.47	109	87	73	55	44	36	29	22
	15	0.98	73	58	49	36	29	24	19.4	14.6
QJ90-	20	1.13	84	67	56	42	34	28	22	16.8
2XTT11008-VP	30	1.39	103	83	69	52	41	34	28	21
(50)	40	1.6	119	95	79	59	48	40	32	24
WHITE	50	1.79	133	106	89	66	53	44	35	27
	60	1.96	146	116	97	73	58	49	39	29

(866)775-8089
FAX (701)775-8217

STREAMJET SJ-7

Always verify tips or orifices you received are the size which you require before using with chemical. Chemical rates need to be obtained from your chemical dealer.

Excellent for application of liquid fertilizer.

Features:
Creates seven identical fluid streams of equal velocity and capacity.
Excellent spray distribution quality.
Removable metering orifice for easy cleaning.
Offered in a variety of sizes for a wide range of application rates.
VisiFlo® color-coding for easy capacity identification.
All acetal construction for excellent chemical resistance.
Recommended operating pressure: 20 - 60 PSI (1.5-4bar).

PRICE: $13.91 D

	PSI	GPM	3	4	5	6	8	10	12	14	16	18
	20	0.1	9.9	7.4	5.9	5	3.7	3	2.5	2.1	1.9	1.7
SJ7-015-VP	30	0.12	11.9	8.9	7.1	5.9	4.5	3.6	3	2.5	2.2	2
(100)	40	0.15	14.9	11.1	8.9	7.4	5.6	4.5	3.7	3.2	2.8	2.5
GREEN	50	0.16	15.8	11.9	9.5	7.9	5.9	4.8	4	3.4	3	2.6
	60	0.18	17.8	13.4	10.7	8.9	6.7	5.3	4.5	3.8	3.3	3
	20	0.14	13.9	10.4	8.3	6.9	5.2	4.2	3.5	3	2.6	2.3
SJ7-02-VP	30	0.17	16.8	12.6	10	8.4	6.3	5	4.2	3.6	3.2	2.8
(50)	40	0.2	19.8	14.9	11.9	9.9	7.4	5.9	5	4.2	3.7	3.3
YELLOW	50	0.23	23	17.1	13.7	11.4	8.5	6.8	5.7	4.9	4.3	3.8
	60	0.25	25	18.6	14.9	12.4	9.3	7.4	6.2	5.3	4.6	4.1
	20	0.22	22	16.3	13.1	10.9	8.2	6.5	5.4	4.7	4.1	3.6
SJ7-03-VP	30	0.27	27	20	16	13.4	10	8	6.7	5.7	5	4.5
(50)	40	0.3	30	22	17.8	14.9	11.1	8.9	7.4	6.4	5.6	5
BLUE	50	0.33	33	25	19.6	16.3	12.3	9.8	8.2	7	6.1	5.4
	60	0.35	35	26	21	17.3	13	10.4	8.7	7.4	6.5	5.8
	20	0.3	30	22	17.8	14.9	11.1	8.9	7.4	6.4	5.6	5
SJ7-04-VP	30	0.35	35	26	21	17.3	13	10.4	8.7	7.4	96.5	5.8
(50)	40	0.4	40	30	24	19.8	14.9	11.9	9.9	8.5	7.4	6.6
RED	50	0.43	43	32	26	21	16	12.8	10.6	9.1	8	7.1
	60	0.46	46	34	27	23	17.1	13.7	11.4	9.8	8.5	7.6
	20	0.38	38	28	23	18.8	14.1	11.3	9.4	8.1	7.1	6.3
SJ7-05-VP	30	0.45	45	33	27	22	16.7	13.4	11.1	9.5	8.4	7.4
(50)	40	0.5	50	37	30	25	18.6	14.9	12.4	10.6	9.3	8.3
BROWN	50	0.54	53	40	32	27	20	16	13.4	11.5	10	8.9
	60	0.58	57	43	34	29	22	17.2	14.4	12.3	10.8	9.6
	20	0.45	45	33	27	22	16.7	13.4	11.1	9.5	8.4	7.4
SJ7-06-VP	30	0.54	53	40	32	27	20	16	13.4	11.5	10	8.9
(50)	40	0.6	59	45	36	30	22	17.8	14.9	12.7	11.1	9.9
GRAY	50	0.65	64	48	39	32	24	19.3	16.1	13.8	12.1	10.7
	60	0.7	69	52	42	35	26	21	17.3	14.9	13	11.6
	20	0.57	56	42	34	28	21	16.9	14.1	12.1	10.6	9.4
SJ7-08-VP	30	0.72	71	53	43	36	27	21	17.8	15.3	13.4	11.9
	40	0.8	79	59	48	40	30	24	19.8	17	14.9	13.2
WHITE	50	0.87	86	65	52	73	32	26	22	18.5	16.1	14.4
	60	0.93	92	69	55	46	35	28	23	19.7	17.3	15.3
	20	0.71	70	53	42	35	26	21	17.6	15.1	13.2	11.7
SJ7-10-VP	30	0.9	89	67	53	45	33	27	22	19.1	16.7	14.9
	40	1	99	74	59	50	37	30	25	21	18.6	16.5
LT BLUE	50	1.09	108	81	65	54	40	32	27	23	20	18
	60	1.16	115	86	69	57	43	34	29	25	22	19.1
	20	1.03	102	76	61	51	38	31	25	22	19.1	17
SJ7-15-VP	30	1.29	128	96	77	64	48	38	32	27	24	21
	40	1.5	149	111	89	74	56	45	37	32	28	25
LT GREEN	50	1.65	162	122	97	81	61	49	41	35	30	27
	60	1.76	174	131	105	87	65	52	44	37	33	29

AIR INDUCTION
DUAL PATTERN FLAT SPRAY

AI3070

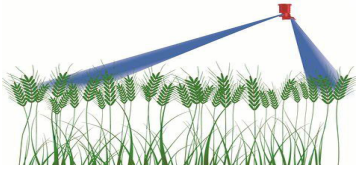

PART#	DESCRIPTION	PRICE
AI3070-XXVP	Tip	12.60 **D**

The AI3070 TeeJet dual spray, utilizing a patent-pending design, provides two spray patterns at complementary angles of 30* and 70* from vertical. The leading patern provides canopy penetration while the trailing pattern provides thorough coverage across the top of crop canopy.

	PSI	GPM	GPA 20" SPACING AT MPH					
			4	5	6	8	10	12
	20	0.11	8.2	6.5	5.4	4.1	3.3	2.7
	30	0.13	9.7	7.7	6.4	4.8	3.9	3.2
AI3070-015VP	40	0.15	11.1	8.9	7.4	5.6	4.5	3.7
(100)	50	0.17	12.6	10.1	8.4	6.3	5	4.2
	60	0.18	13.4	10.7	8.9	6.7	5.3	4.5
	75	0.21	15.6	12.5	10.4	7.8	6.2	5.2
	90	0.23	17.1	13.7	11.4	8.5	6.8	5.7
	20	0.14	10.4	8.3	6.9	5.2	4.2	3.5
	30	0.17	12.6	10.1	8.4	6.3	5	4.2
AI3070-02VP	40	0.20	14.9	11.9	9.9	7.4	5.9	5
(100)	50	0.22	16.3	13.1	10.9	8.2	6.5	5.4
	60	0.24	17.8	14.3	11.9	8.9	7.1	5.9
	75	0.27	20	16	13.4	10	8	6.7
	90	0.30	22	17.8	14.9	11.1	8.9	7.4
	20	0.18	13.4	10.7	8.9	6.7	5.3	4.5
	30	0.22	16.3	13.1	10.9	8.2	6.5	5.4
AI3070-025VP	40	0.25	18.6	14.9	12.4	9.3	7.4	6.2
(100)	50	0.28	21	16.6	13.9	10.4	8.3	6.9
	60	0.31	23	18.4	15.3	11.5	9.2	7.7
	75	0.34	25	20	16.8	12.6	10.1	8.4
	90	0.38	28	23	18.8	14.1	11.3	9.4
	20	0.21	15.6	12.5	10.4	7.8	6.2	5.2
	30	0.26	19.3	15.4	12.9	9.7	7.7	6.4
AI3070-03VP	40	0.30	22	17.8	14.9	11.1	8.9	7.4
(50)	50	0.34	25	20	16.8	12.6	10.1	8.4
	60	0.37	27	22	18.3	13.7	11	9.2
	75	0.41	30	24	20	15.2	12.2	10.1
	90	0.45	33	27	22	16.7	13.4	11.1
	20	0.28	21	16.6	13.9	10.4	8.3	6.9
	30	0.35	26	21	17.3	13	10.4	8.7
AI3070-04VP	40	0.40	30	24	19.8	14.9	11.9	9.9
(50)	50	0.45	33	27	22	16.7	13.4	11.1
	60	0.49	36	29	24	18.2	14.6	12.1
	75	0.55	41	33	27	20	16.3	13.6
	90	0.60	45	36	30	22	17.8	14.9
	20	0.35	26	21	17.3	13	10.4	8.7
	30	0.43	32	26	21	16	12.8	10.6
AI3070-05VP	40	0.50	37	30	25	18.6	14.9	12.4
(50)	50	0.56	42	33	28	21	16.6	13.9
	60	0.61	45	36	30	23	18.1	15.1
	75	0.68	50	40	34	25	20	16.8
	90	0.75	56	45	37	28	22	18.6

TWIN JET FLAT & FULL JET CONE SPRAY TIP

FEATURES:
PENETRATES CROP RESIDUE OR DENSE FOLIAGE.
SMALLER DROPLETS FOR THOROUGH COVERAGE.
BETTER SPRAY DISTRIBUTION ALONG BOOM
THAN WITH HOLLOW CONE NOZZLES.

ALL VS TWINJET $14.87 D

DEGREE	OPTIMUM SPRAY HEIGHT
80˚	30”
110˚	20”

PART #				GPA 20” SPACING AT MPH											
80 DEGREE	110 DEGREE	PSI	GPM	4	5	6	7	8	9	10	12	14	16	18	20
TJ60-8002VS	TJ60-11002VS	30	0.17	12.6	10.1	8.4	7.2	6.3	5.6	5	4.2	3.6	3.2	2.8	2.5
(100)	(100)	40	0.2	14.9	11.9	9.9	8.5	7.4	6.6	5.9	5	4.2	3.7	3.3	3
YELLOW	YELLOW	50	0.22	16.3	13.1	10.9	9.3	8.2	7.3	6.5	5.4	4.7	4.1	3.6	3.3
		60	0.24	17.8	14.3	11.9	10.2	8.9	7.9	7.1	5.9	5.1	4.5	4	3.6
TJ60-8003VS	TJ60-11003VS	30	0.26	19.3	15.4	12.9	11	9.7	8.6	7.7	6.4	5.5	4.8	4.3	3.9
(100)	(100)	40	0.3	22	17.8	14.9	12.7	11.1	9.9	8.9	7.4	6.4	5.6	5	4.5
BLUE	BLUE	50	0.34	25	20	16.8	14.4	12.6	11.2	10.1	8.4	7.2	6.3	5.6	5
		60	0.37	27	22	18.3	15.7	13.7	12.2	11	9.2	7.8	6.9	6.1	5.5
TJ60-8004VS	TJ60-11004VS	30	0.35	26	21	17.3	14.9	13	11.6	10.4	8.7	7.4	6.5	5.8	5.2
(50)	(50)	40	0.4	30	24	19.8	17	14.9	13.2	11.9	9.9	8.5	7.4	6.6	5.9
RED	RED	50	0.45	33	27	22	19.1	16.7	14.9	13.4	11.1	9.5	8.4	7.4	6.7
		60	0.49	36	29	24	21	18.2	16.2	14.6	12.1	10.4	9.1	8.1	7.3
TJ60-8006VS	TJ60-11006VS	30	0.52	39	31	26	22	19.3	17.2	15.4	12.9	11	9.7	8.6	7.7
(50)	(50)	40	0.6	45	36	30	25	22	19.8	17.8	14.9	12.7	11.1	9.9	8.9
GRAY	GRAY	50	0.67	50	40	33	28	25	22	19.9	16.6	14.2	12.4	11.1	9.9
		60	0.73	54	43	36	31	27	24	22	18.1	15.5	13.6	12	10.8
TJ60-8008VS	TJ60-11008VS	30	0.69	51	41	34	29	26	23	20	17.1	14.6	12.8	11.4	10.2
(50)	(50)	40	0.8	59	48	40	34	30	26	24	19.8	17	14.9	13.2	11.9
WHITE	WHITE	50	0.89	66	53	44	38	33	29	26	22	18.9	16.5	14.7	13.2
		60	0.98	73	58	49	42	36	32	29	24	21	18.2	16.2	14.6

			GPA 40” SPACING AT MPH					
	PSI	GPM	3	4	5	6	7	7.5
BROWN	15	0.34	16.8	12.6	10.1	8.4	7.2	6.7
FL-5VS	20	0.38	18.8	14.1	11.3	9.4	8.1	7.5
FL-5VC	30	0.46	23	17.1	13.7	11.4	9.8	9.1
	40	0.52	26	19.3	15.4	12.9	11.0	10.3
GRAY	15	0.42	21	15.6	12.5	10.4	8.9	8.3
FL-6.5VS	20	0.48	24	17.8	14.3	11.9	10.2	9.5
FL-6.5VC	30	0.57	28	21	16.9	14.1	12.1	11.3
	40	0.65	32	24	19.3	16.1	13.8	12.9
WHITE	15	0.51	25	18.9	15.1	12.6	10.8	10.1
FL-8VS	20	0.58	29	22	17.2	14.4	12.3	11.5
FL-8VC	30	0.70	35	26	21	17.3	14.9	13.9
	40	0.79	39	29	23	19.6	16.8	15.6
BLUE	15	0.67	33	25	19.9	16.6	14.2	13.3
FL-10VS	20	0.76	38	28	23	18.8	16.1	15.0
FL-10VC	30	0.91	45	34	27	23	19.3	18.0
	40	1.00	50	37	30	25	21	19.8
GREEN	15	0.97	48	36	29	24	21	19.2
FL-15VS	20	1.11	55	41	33	27	24	22
FL-15VC	30	1.32	65	49	39	33	28	26
	40	1.50	74	56	45	37	32	30

FULLJET WIDE ANGLE FULL CONE SPRAY TIP

FEATURES:
LARGE DROPLETS TO REDUCE DRIFT
DISTRIBUTION OVER A RANGE OF PRESSURES (15 - 40 PSI)
WIDE SPRAY ANGLE ALLOWS USE OF 40” SPACING

MATERIAL CODE	DESCRIPTION	PRICE
VS	VISIFLO SS	14.55 **D**
VC	VISIFLO CELCON	9.26 **D**

TURBO FLOODJET
WIDE ANGLE FLAT SPRAY TIP

Always verify tips or orifices you received are the size which you require before using with chemical. Chemical rates need to be obtained from your chemical dealer.

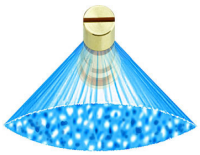

MATERIAL CODE	PRICE
VS	16.15 **D**
VP	3.69 **D**

*Wide angle spray nozzle height is influenced by nozzle orientation. The critical factor is to achieve a minimum 30% overlap.

EXCELLENT CHOICE FOR:
PRE-EMERGE & SYSTEMIC HERBICIDES.
SYSTEMIC FUNGICIDES & INSECTICIDES.

FEATURES:

**EXCELLENT SPRAY DISTRIBUTION FOR UNIFORM COVERAGE ALONG THE BOOM.

**NOZZLE DESIGN INCORPORATES A PRE-ORIFICE TO PRODUCE LARGER DROPLETS FOR LESS DRIFT.

**LARGER ROUND ORIFICE REDUCES CLOGGING.

**STAINLESS STEEL WITH VISIFLO COLOR-CODING FOR EASY SIZE IDENTIFICATION.

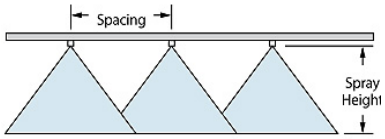

SPACING	OPTIMUM HEIGHT
20”	24”*
30”	30”*
40”	39”*

	PSI	GPM	GPA 40” SPACING AT MPH										
			4	5	6	7	8	9	10	12	14	16	18
	10	0.20	7.4	5.9	5.0	4.2	3.7	3.3	3.0	2.5	2.1	1.9	1.7
TF-VS2	20	0.28	10.4	8.3	6.9	5.9	5.2	4.6	4.2	3.5	3.0	2.6	2.3
TF-VP2	30	0.35	13.0	10.4	8.7	7.4	6.5	5.8	5.2	4.3	3.7	3.2	2.9
RED	40	0.40	14.9	11.9	9.9	8.5	7.4	6.6	5.9	5.0	4.2	3.7	3.3
	10	0.25	9.3	7.4	6.2	5.3	4.6	4.1	3.7	3.1	2.7	2.3	2.1
TF-VS2.5	20	0.35	13.0	10.4	8.7	7.4	6.5	5.8	5.2	4.3	3.7	3.2	2.9
TF-VP2.5	30	0.43	16.0	12.8	10.6	9.1	8.0	7.1	6.4	5.3	4.6	4.0	3.5
BROWN	40	0.50	18.6	14.9	12.4	10.6	9.3	8.3	7.4	6.2	5.3	4.6	4.1
	10	0.30	11.1	8.9	7.4	6.4	5.6	5.0	4.5	3.7	3.2	2.8	2.5
TF-VS3	20	0.42	15.6	12.5	10.4	8.9	7.8	6.9	6.2	5.2	4.5	3.9	3.5
TF-VP3	30	0.52	19.3	15.4	12.9	11.0	9.7	8.6	7.7	6.4	5.5	4.8	4.3
GRAY	40	0.60	22	17.8	14.9	12.7	11.1	9.9	8.9	7.4	6.4	5.6	5.0
	10	0.40	14.9	11.9	9.9	8.5	7.4	6.6	5.9	5.0	4.2	3.7	3.3
TF-VS4	20	0.57	21	16.9	14.1	12.1	10.6	9.4	8.5	7.1	6.0	5.3	4.7
TF-VP4	30	0.69	26	20	17.1	14.6	12.8	11.4	10.2	8.5	7.3	6.4	5.7
WHITE	40	0.80	30	24	19.8	17.0	14.9	13.2	11.9	9.9	8.5	7.4	6.6
	10	0.50	18.6	14.9	12.4	10.6	9.3	8.3	7.4	6.2	5.3	4.6	4.1
TF-VS5	20	0.71	26	21	17.6	15.1	13.2	11.7	10.5	8.8	7.5	6.6	5.9
TF-VP5	30	0.87	32	26	22	18.5	16.1	14.4	12.9	10.8	9.2	8.1	7.2
BLUE	40	1.00	37	30	25	21	18.6	16.5	14.9	12.4	10.6	9.3	8.3
	10	0.75	28	22	18.6	15.9	13.9	12.4	11.1	9.3	8.0	7.0	6.2
TF-VS7.5	20	1.06	39	31	26	22	19.7	17.5	15.7	13.1	11.2	9.8	8.7
TF-VP7.5	30	1.30	48	39	32	28	24	21	19.3	16.1	13.8	12.1	10.7
GREEN	40	1.50	56	45	37	32	28	25	22	18.6	15.9	13.9	12.4
	10	1.00	37	30	25	21	18.6	16.5	14.9	12.4	10.6	9.3	8.3
TF-VS10	20	1.41	52	42	35	30	26	23	21	17.4	15.0	13.1	11.6
TF-VP10	30	1.73	64	51	43	37	32	29	26	21	18.4	16.1	14.3
BLACK	40	2.00	74	59	50	42	37	33	30	25	21	18.6	16.5

(866)775-8089
FAX (701)775-8217

FLOODJET WIDE ANGLE FLAT SPRAY TIPS & NOZZLES

Always verify tips or orifices you received are the size which you require before using with chemical. Chemical rates need to be obtained from your chemical dealer.

THE FLOODJET TIPS AND NOZZLES PRODUCE A VERY WIDE DEFLECTOR TYPE FLAT SPRAY PATTERN. ROUND ORIFICE MINIMIZES CLOGGING.

				GPA									
				4	5	6	8	10	12	14	16	18	20
		PSI	GPM	mph	mph	mph	mph	mph	mph	mph	mph	mph	mph
		10	0.05										
TK-*.50	1/8K-*.50	20	0.07	2.6	2.1	1.7	1.3	1.0	0.87	0.74	0.65	0.58	0.52
		30	0.09	3.3	2.7	2.2	1.7	1.3	1.11	0.95	0.84	0.74	0.67
		40	0.10	3.7	3.0	2.5	1.9	1.5	1.2	1.1	0.93	0.83	0.74
		10	0.08	3.0	2.4	2.0	1.5	1.2	0.99	0.85	0.74	0.66	0.59
TK-*.75	1/8K-*.75	20	0.11	4.1	3.3	2.7	2.0	1.6	1.4	1.2	1.0	0.91	0.82
		30	0.13	4.8	3.9	3.2	2.4	1.9	1.6	1.4	1.2	1.1	0.97
		40	0.15	5.6	4.5	3.7	2.8	2.2	1.9	1.6	1.4	1.2	1.1
		10	0.10	3.7	3.0	2.5	1.9	1.5	1.2	1.1	0.93	0.83	0.74
TK-*1	1/8K-*1	20	0.14	5.2	4.2	3.5	2.6	2.1	1.7	1.5	1.3	1.2	1.0
		30	0.17	6.3	5.0	4.2	3.2	2.5	2.1	1.8	1.6	1.4	1.3
		40	0.20	7.4	5.9	5.0	3.7	3.0	2.5	2.1	1.9	1.7	1.5
		10	0.15	5.6	4.5	3.7	2.8	2.2	1.9	1.6	1.4	1.2	1.1
TK-*1.5	1/8K-*1.5	20	0.21	7.8	6.2	5.2	3.9	3.1	2.6	2.2	1.9	1.7	1.6
		30	0.26	9.7	7.7	6.4	4.8	3.9	3.2	2.8	2.4	2.1	1.9
		40	0.30	11.1	8.9	7.4	5.6	4.5	3.7	3.2	2.8	2.5	2.2
		10	0.20	7.4	5.9	5.0	3.7	3.0	2.5	2.1	1.9	1.7	1.5
TK-VS2		20	0.28	10.4	8.3	6.9	5.2	4.2	3.5	3.0	2.6	2.3	2.1
TK-*2	1/8K-*2	30	0.35	13.0	10.4	8.7	6.5	5.2	4.3	3.7	3.2	2.9	2.6
		40	0.40	14.9	11.9	9.9	7.4	5.9	5.0	4.2	3.7	3.3	3.0
		10	0.25	9.3	7.4	6.2	4.6	3.7	3.1	2.7	2.3	2.1	1.9
TK-VS2.5		20	0.35	13.0	10.4	8.7	6.5	5.2	4.3	3.7	3.2	2.9	2.6
TK-*2.5	1/8K-*2.5	30	0.43	16.0	12.8	10.6	8.0	6.4	5.3	4.6	4.0	3.5	3.2
		40	0.50	18.6	14.9	12.4	9.3	7.4	6.2	5.3	4.6	4.1	3.7
		10	0.30	11.1	8.9	7.4	5.6	4.5	3.7	3.2	2.8	2.5	2.2
TK-VS3		20	0.42	15.6	12.5	10.4	7.8	6.2	5.2	4.5	3.9	3.5	3.1
TK-*3	1/8K-*3	30	0.52	19.3	15.4	12.9	9.7	7.7	6.4	5.5	4.8	4.3	3.9
		40	0.60	22	17.8	14.9	11.1	8.9	7.4	6.4	5.6	5.0	4.5
		10	0.40	14.9	11.9	9.9	7.4	5.9	5	4.2	3.7	3.3	3.0
TK-VS4		20	0.57	21	16.9	14.1	10.6	8.5	7.1	6	5.3	4.7	4.2
TK-*4	1/8K-*4	30	0.69	26	20	17.1	12.8	10.2	8.5	7.3	6.4	5.7	5.1
		40	0.80	30	24	19.8	14.9	11.9	9.9	8.5	7.4	6.6	5.9
		10	0.50	18.6	14.9	12.4	9.3	7.4	6.2	5.3	4.6	4.1	3.7
TK-VS5		20	0.71	26	21	17.6	13.2	10.5	8.8	7.5	6.6	5.9	5.3
TK-*5	1/8K-*5	30	0.87	32	26	22	16.1	12.9	10.8	9.2	8.1	7.2	6.5
		40	1.00	37	30	25	18.6	14.9	12.4	10.6	9.3	8.3	7.4
		10	0.75	28	22	18.6	13.9	11.1	9.3	8.0	7.0	6.2	5.6
TK-VS7.5		20	1.06	39	31	26	19.7	15.7	13.1	11.2	9.8	8.7	7.9
TK-*7.5	1/8K-*7.5	30	1.30	48	39	32	24	19.3	16.1	13.8	12.1	10.7	9.7
		40	1.50	56	45	37	28	22	18.6	15.9	13.9	12.4	11.1
		10	1.00	37	30	25	18.6	14.9	12.4	10.6	9.3	8.3	7.4
TK-VS10		20	1.41	52	42	35	26	21	17.4	15.0	13.1	11.6	10.5
TK-*10	1/8K-*10	30	1.73	64	51	43	32	26	21	18.4	16.1	14.3	12.8
		40	2.00	74	59	50	37	30	25	21	18.6	16.5	14.9
		10	1.20	45	36	30	22	17.8	14.9	12.7	11.1	9.9	8.9
		20	1.70	63	50	42	32	25	21	18.0	15.8	14.0	12.6
	1/8K-*12	30	2.08	77	62	51	39	31	26	22	19.3	17.2	15.4
		40	2.40	89	71	59	45	36	30	25	22	19.8	17.8
		10	1.50	56	45	37	28	22	18.6	15.9	13.9	12.4	11.1
TK-*15	1/8K-*15	20	2.12	79	63	52	39	31	26	22	19.7	17.5	15.7
		30	2.60	97	77	64	48	39	32	28	24	21	19.3
		40	3.00	111	89	74	56	45	37	32	28	25	22
		10	1.80	67	53	45	33	27	22	19.1	16.7	14.9	13.4
		20	2.55	95	76	63	47	38	32	27	24	21	18.9
	1/8K-*18	30	3.12	116	93	77	58	46	39	33	29	26	23
		40	3.60	134	107	89	67	53	45	38	33	30	27
		10	2.00	74	59	50	37	30	25	21	18.6	16.5	14.9
TK-*20	1/8K-*20	20	2.83	105	84	70	53	42	35	30	26	23	21
	QCK-SS20	30	3.46	128	103	86	64	51	43	37	32	29	26
		40	4.00	149	119	99	74	59	50	42	37	33	30
		10	2.20	82	65	54	41	33	27	23	20	18.2	16.3
		20	3.11	115	92	77	58	46	38	33	29	26	23
	1/4K*22	30	3.81	141	113	94	71	57	47	40	35	31	28
		40	4.40	163	131	109	82	65	54	47	41	36	33
		10	2.40	89	71	59	45	36	30	25	22	19.8	17.8
		20	3.39	126	101	84	63	50	42	36	31	28	25
	1/4K-*24	30	4.16	154	124	103	77	62	51	44	39	34	31
		40	4.80	178	143	119	89	71	59	51	45	40	36

STYLE	DESCRIPTION	SIZE	PRICE
TKSS	ALL STAINLESS	.5-40	15.30 **D**
TKVS	STAINLESS-VISIFLO		14.57 **D**
1/4KSS	THREADED SS	1/4"	23.58 **D**
3/8KSS	THREADED SS	3/8"	31.61 **D**
1/8KSS	THREADED SS	1/8"	19.52 **D**
QCK-SS	STAINLESS-VISIFLO	20-40	45.96 **D**
QCK-SS	STAINLESS-VISIFLO	50-80	50.25 **D**
QCK-SS	STAINLESS-VISIFLO	100-120	58.34 **D**
QCK-SS	STAINLESS-VISIFLO	150-200	99.10 **D**

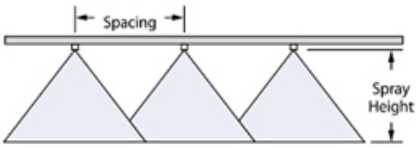

THERE IS NO RECOMMENDED SPRAY HEIGHT FOR STANDARD FLOOD JET TIPS. RAISE OR LOWER SPRAY BOOM OR ROTATE NOZZLE BODIES TO DOUBLE OVERLAP SPRAY PATTERNS AND PROVIDE OPTIMUM COVERAGE ALONG BOOM.

FLOODJET WIDE ANGLE FLAT SPRAY TIPS & NOZZLES

STYLE	DESCRIPTION	SIZE	PRICE
TKSS	ALL STAINLESS	.5-40	15.30 **D**
TKVS	STAINLESS-VISIFLO		14.57 **D**
1/4KSS	THREADED SS	1/4”	23.58 **D**
3/8KSS	THREADED SS	3/8”	31.61 **D**
1/8KSS	THREADED SS	1/8”	19.52 **D**
QCK-SS	STAINLESS-VISIFLO	20-40	45.96 **D**
QCK-SS	STAINLESS-VISIFLO	50-80	50.25 **D**
QCK-SS	STAINLESS-VISIFLO	100-120	58.34 **D**
QCK-SS	STAINLESS-VISIFLO	150-200	99.10 **D**

		PSI	GPM	GPA									
				4 mph	5 mph	6 mph	8 mph	10 mph	12 mph	14 mph	16 mph	18 mph	20 mph
		10	2.7	67	53	45	33	27	22	19.1	16.7	14.9	13.4
	1/4K-*27	20	3.8	94	75	63	47	38	31	27	24	21	18.8
		30	4.7	116	93	78	58	47	39	33	29	26	23
		40	5.4	134	107	89	67	53	45	38	33	30	27
		10	3.0	74	59	50	37	30	25	21	18.6	16.5	14.9
TK-*30	3/8K-*30	20	4.2	104	83	69	52	42	35	30	26	23	21
	QCK-SS30	30	5.2	129	103	86	64	51	43	37	32	29	26
		40	6.0	149	119	99	74	59	50	42	37	33	30
		10	3.5	87	69	58	43	35	29	25	22	19.3	17.3
	3/8K-*35	20	4.9	121	97	81	61	49	40	35	30	27	24
		30	6.1	151	121	101	75	60	50	43	38	34	30
		40	7.0	173	139	116	87	69	58	50	43	39	35
		10	4.0	99	79	66	50	40	33	28	25	22	19.8
	3/8K-*40	20	5.7	141	113	94	71	56	47	40	35	31	28
	QCK-SS40	30	6.9	171	137	114	85	68	57	49	43	38	34
		40	8.0	198	158	132	99	79	66	57	50	44	40
		10	4.5	111	89	74	56	45	37	32	28	25	22
	3/8K-*45	20	6.4	158	127	106	79	63	53	45	40	35	32
		30	7.8	193	154	129	97	77	64	55	48	43	39
		40	9.0	223	178	149	111	89	74	64	56	50	45
		10	5.0	124	99	83	62	50	41	35	31	28	25
	1/2K-*50	20	7.1	176	141	117	88	70	59	50	44	39	35
	QCK-SS50	30	8.7	215	172	144	108	86	72	62	54	48	43
		40	10.0	248	198	165	124	99	83	71	62	55	50
		10	6.0	149	119	99	74	59	50	42	37	33	30
	1/2K-*60	20	8.5	210	168	140	105	84	70	60	53	47	42
	QCK-SS60	30	10.4	257	206	172	129	103	86	74	64	57	51
		40	12.0	297	238	198	149	119	99	85	74	66	59
		10	7.0	173	139	116	87	69	58	50	43	39	35
	1/2K-*70	20	9.9	245	196	163	123	98	82	70	61	54	49
		30	12.1	299	240	200	150	120	100	86	75	67	60
		40	14.0	347	277	231	172	139	116	99	87	77	69
		10	8.0	198	158	132	99	79	66	57	50	44	40
	1/2K-*80	20	11.3	280	224	186	140	112	93	80	70	62	56
	QCK-SS80	30	13.9	244	275	229	172	138	115	98	86	76	69
		40	16.0	396	317	264	198	158	132	113	99	88	79
		10	9.0	223	178	149	111	89	74	64	56	50	45
	3/4K-*90	20	12.7	314	251	210	157	126	105	90	79	70	63
		30	15.6	386	309	257	193	154	129	110	97	86	77
		40	18.0	446	356	297	223	178	149	127	111	99	89
		10	10.0	248	198	165	124	99	83	70	62	55	50
	3/4K-*100	20	14.1	349	279	233	174	140	116	100	87	78	70
	QCK-SS100	30	17.3	428	343	285	214	171	143	122	107	95	86
		40	20.0	495	396	330	248	198	165	141	124	110	99
		10	11.0	272	218	182	136	109	91	78	68	61	54
	3/4K-*110	20	15.6	386	309	257	193	154	129	110	97	86	77
		30	19.1	473	378	315	236	189	158	135	118	105	95
		40	22.0	545	436	363	272	218	182	156	136	121	109
		10	12.0	297	238	198	149	119	99	85	74	66	59
	3/4K-*120	20	17.0	421	337	281	210	168	140	120	105	94	84
	QCK-SS120	30	20.8	515	412	343	257	206	172	147	129	114	103
		40	24.0	594	475	396	297	238	198	170	149	132	119
		10	14.0	347	277	231	173	139	116	99	87	77	69
	3/4K-*140	20	19.8	490	392	327	245	196	163	140	123	109	98
		30	24.2	599	479	399	299	240	200	171	150	133	120
		40	28.0	693	554	462	347	277	231	198	173	154	139
		10	15.0	371	297	248	186	149	124	106	93	83	74
	QCK-SS150	20	21.2	525	420	350	262	210	175	150	131	117	105
		30	26.0	644	515	429	322	257	215	184	161	143	129
		40	30.0	743	594	495	371	297	248	212	186	165	149
		10	16.0	396	317	264	198	158	132	113	99	88	79
	3/4K-*160	20	22.6	559	447	373	280	224	186	160	140	124	112
		30	27.7	686	548	457	343	274	229	196	171	152	137
		40	32.0	792	634	528	396	317	264	226	198	176	158
		10	18.0	446	356	297	223	1778	149	127	111	99	89
	3/4K-*180	20	25.5	631	505	421	316	252	210	180	158	140	126
	QCK-SS180	30	31.2	772	618	515	386	309	257	221	193	172	154
		40	36.0	891	713	594	446	356	297	255	223	198	178
		10	21.0	520	416	347	260	208	173	149	130	116	104
	3/4K-*210	20	29.7	735	588	490	368	294	245	210	184	163	147
	QCK-SS210	30	36.4	901	721	601	450	360	300	257	225	200	180
		40	42.0	1040	832	693	520	416	347	297	260	231	208

(866)775-8089
FAX (701)775-8217

DISC-CORE TYPE FULL CONE SPRAY TIP

Always verify tips or orifices you received are the size which you require before using with chemical. Chemical rates need to be obtained from your chemical dealer.

ORIFICE DISCS:
AVAILABLE IN A VARIETY OF SIZES AND MATERIALS, CERAMIC FOR INCREASED WEAR LIFE, HARDENED STAINLESS STEEL, STAINLESS STEEL AND POLYMER.

CORES:
STANDARD CORES ARE MADE OF BRASS, ALSO AVAILABLE IN CERAMIC, HARDENED STAINLESS STEEL, ALUMINUM AND NYLON. ALL CORES EXCEPT CERAMIC ARE MADE WITH READ "NIBS", BE SURE CORE IS ALWAYS PLACED WITH THE NIB FACING THE NOZZLE BODY.

PART #	DISC DESCRIPTION	PRICE
DCER-2	CERAMIC	5.05 **D**
D2	HARDENED STAINLESS	1.85 **D**
DE-2	STAINLESS	1.67 **D**
DVP-2	POLYMER	1.19 **D**

PART #	CORE DESCRIPTION	PRICE
DC-XX-CER	CERAMIC	7.67 **D**
DC-XX-HSS	HARDENED STAINLESS	7.61 **D**
DC-XX	BRASS	3.19 **D**
DC-XX-NY	NYLON	1.67 **D**

DISC	CORE	SIZE	GPM										SPRAY ANGLE		
			10	20	30	40	60	80	100	150	200	300	20	40	80
			PSI	PSI	PSI	PSI	PSI	PSI	PSI	PSI	PSI	PSI	PSI	PSI	PSI
DI	DC31	.031"	0.08	0.11	0.13	0.15	0.18	0.20	0.23	0.27	0.31	0.37	49°	47°	43°
D1.5	DC31	.036"	0.10	0.14	0.17	0.19	0.23	0.26	0.29	0.35	0.40	0.48	57°	65°	53°
D2	DC31	.041"	0.12	0.16	0.19	0.22	0.26	0.30	0.33	0.40	0.45	0.55	62°	63°	61°
D3	DC31	.047"	0.13	0.18	0.21	0.24	0.29	0.33	0.37	0.44	0.50	0.60	63°	65°	63°
D1.5	DC33	.031"	0.09	0.11	0.12	0.14	0.17	0.20	0.22	0.26	0.30	0.37	27°	32°	35°
D1.5	DC33	.036"	0.12	0.15	0.17	0.19	0.23	0.26	0.30	0.36	0.41	0.50	37°	43°	45°
D2	DC33	.041"	0.13	0.17	0.21	0.24	0.29	0.33	0.37	0.45	0.52	0.63	45°	52°	55°
D3	DC33	.047"	0.15	0.21	0.25	0.29	0.36	0.41	0.45	0.55	0.63	0.76	48°	54°	57°
D4	DC33	.063"	0.20	0.28	0.34	0.39	0.47	0.54	0.60	0.73	0.83	1.02	50°	56°	61°
D1.5	DC35	.031"	0.08	0.11	0.13	0.14	0.17	0.20	0.22	0.26	0.29	0.35	19°	23°	26°
D1.5	DC35	.036"	0.10	0.14	0.17	0.19	0.23	0.26	0.29	0.34	0.39	0.46	23°	27°	29°
D2	DC35	.041"	0.14	0.18	0.24	0.25	0.30	0.34	0.37	0.45	0.51	0.60	40°	44°	47°
D3	DC35	.047"	0.16	0.22	0.26	0.30	0.36	0.41	0.45	0.55	0.62	0.74	45°	50°	52°
D4	DC35	.063"	0.27	0.37	0.44	0.50	0.60	0.70	0.79	0.93	1.10	1.30	68°	70°	71°
D5	DC35	.078"	0.34	0.48	0.58	0.66	0.80	0.92	1.00	1.20	1.40	1.70	67°	69°	71°
D2	DC56	.041"			0.21	0.25	0.30	0.35	0.39	0.47	0.55	0.67		14°	17°
D3	DC56	.047"			0.29	0.34	0.41	0.48	0.53	0.65	0.75	0.92		20°	23°
D4	DC56	.063"		0.39	0.48	0.55	0.67	0.78	0.87	1.06	1.23	1.51	20°	26°	29°
D5	DC56	.078"	0.38	0.54	0.66	0.76	0.93	1.08	1.20	1.47	1.69	2.08	26°	32°	34°
D6	DC56	.094"	0.55	0.78	0.95	1.10	1.35	1.55	1.74	2.13	2.46	3.02	34°	39°	41°
D7	DC56	.109"	0.76	1.07	1.32	1.52	1.86	2.15	2.40	2.94	3.40	4.16	45°	52°	54°
D8	DC56	.125"	0.96	1.36	1.67	1.93	2.36	2.73	3.05	3.73	4.32	5.28	52°	57°	59°
D10	DC56	.156"	1.35	1.91	2.34	2.70	3.31	3.82	4.26	5.22	6.03	7.39	62°	65°	67°

DISC-CORE TYPE
HOLLOW CONE SPRAY TIP

***Always verify tips or orifices you received are the size which you require before using with chemical.
Chemical rates need to be obtained from your chemical dealer.***

TYPICAL ASSEMBLY W/CERAMIC DISC & CORE

PART #	DISC DESCRIPTION	PRICE
DCER-2	CERAMIC	5.05 **D**
D2	HARDENED STAINLESS	1.85 **D**
DE-2	STAINLESS	1.67 **D**
DVP-2	POLYMER	1.19 **D**

PART #	CORE DESCRIPTION	PRICE
DC-XX-CER	CERAMIC	7.67 **D**
DC-XX-HSS	HARDENED STAINLESS	7.61 **D**
DC-XX	BRASS	3.19 **D**
DC-XX-NY	NYLON	1.67 **D**

DISC	CORE	SIZE	GPM										SPRAY ANGLE		
			10 PSI	20 PSI	30 PSI	40 PSI	60 PSI	80 PSI	100 PSI	150 PSI	200 PSI	300 PSI	20 PSI	40 PSI	80 PSI
D1	DC13	.031"			0.059	0.066	0.078	0.088	0.097	0.115	0.128	0.152		51º	62º
D1.5	DC13	.036"		0.057	0.067	0.075	0.088	0.098	0.110	0.127	0.142	0.167	38 º	55º	66º
D2	DC13	.041"		0.064	0.075	0.08	0.10	0.11	0.12	0.14	0.16	0.18	49º	67º	72º
D3	DC13	.047"		0.071	0.08	0.09	0.11	0.12	0.13	0.16	0.18	0.20	53º	70º	75º
D4	DC13	.063"	0.070	0.09	0.11	0.12	0.14	0.16	0.17	0.20	0.23	0.27	69º	79º	83º
D1.5	DC23	.031"			0.064	0.072	0.080	0.096	0.107	0.124	0.139	0.164		47º	58º
D1.5	DC23	.036"		0.640	0.076	0.086	0.103	0.117	0.130	0.155	0.175	0.210	34º	51º	62º
D2	DC23	.041"		0.078	0.092	0.10	0.13	0.14	0.16	0.19	0.21	0.25	51º	63º	70º
D3	DC23	.047"	0.065	0.087	0.10	0.12	0.14	0.16	0.18	0.21	0.24	0.28	58º	69º	75º
D4	DC23	.063"	0.082	0.113	0.14	0.15	0.19	0.21	0.23	0.28	0.32	0.38	68º	82º	87º
D5	DC23	.078"	0.095	0.13	0.16	0.18	0.22	0.25	0.28	0.34	0.38	0.46	79º	89º	94º
D6	DC23	.094"	0.112	0.15	0.19	0.21	0.26	0.29	0.32	0.39	0.45	0.54	84º	93º	98º
D1.5	DC25	.031"			0.088	0.101	0.122	0.138	0.156	0.185	0.210	0.255		27º	43º
D1.5	DC25	.036"			0.118	0.135	0.162	0.185	0.205	0.245	0.280	0.33		38º	49º
D2	DC25	.041"		0.12	0.14	0.16	0.19	0.22	0.25	0.29	0.34	0.41	39º	51º	58º
D3	DC25	.047"	0.10	0.14	0.17	0.19	0.23	0.26	0.29	0.35	0.40	0.48	52º	61º	67º
D4	DC25	.063"	0.15	0.21	0.25	0.29	0.35	0.40	0.45	0.54	0.62	0.75	67º	74º	80º
D5	DC25	.078"	0.18	0.25	0.30	0.35	0.42	0.48	0.54	0.65	0.75	0.90	73º	79º	84º
D6	DC25	.094"	0.23	0.32	0.39	0.44	0.54	0.62	0.70	0.85	0.97	1.19	79º	85º	89º
D7	DC25	.109"	0.26	0.37	0.45	0.52	0.63	0.73	0.81	0.98	1.18	1.37	85º	91º	93º
D8	DC25	.125"	0.31	0.43	0.53	0.61	0.75	0.89	0.97	1.19	1.36	1.68	91º	96º	97º
D10	DC25	.156"	0.38	0.54	0.65	0.76	0.93	1.07	1.21	1.48	1.71	2.10	97º	102º	103º
D12	DC25	.188"	0.46	0.61	0.80	0.93	1.15	1.32	1.47	1.81	2.09	2.55	103º	109º	112º
D14	DC25	.219"	0.51	0.72	0.88	1.03	1.26	1.47	1.65	2.02	2.34	2.89	108º	113º	114º
D1	DC45	.031"				0.125	0.148	0.170	0.190	0.225	0.257	0.310		22º	34º
D1.5	DC45	.036"			0.14	0.16	0.20	0.23	0.25	0.31	0.35	0.43		33º	44º
D2	DC45	.041"		0.14	0.18	0.20	0.25	0.28	0.32	0.38	0.44	0.53	32º	46º	55º
D3	DC45	.047"		0.17	0.20	0.23	0.28	0.33	0.36	0.44	0.51	0.62	40º	53º	60º
D4	DC45	.063"	0.18	0.25	0.31	0.36	0.43	0.50	0.56	0.68	0.78	0.95	62º	69º	72º
D5	DC45	.078"	0.23	0.32	0.39	0.45	0.55	0.64	0.71	0.86	0.99	1.22	67º	73º	76º
D6	DC45	.094"	0.29	0.41	0.50	0.58	0.72	0.83	0.93	1.15	1.33	1.64	73º	79º	81º
D7	DC45	.109"	0.33	0.48	0.59	0.68	0.84	0.97	1.11	1.35	1.57	1.94	81º	86º	87º
D8	DC45	.125"	0.41	0.59	0.72	0.84	1.04	1.21	1.35	1.68	1.94	2.40	86º	90º	90º
D10	DC45	.156"	0.54	0.77	0.94	1.10	1.35	1.57	1.77	2.18	2.50	3.10	90º	93º	93º
D12	DC45	.188"	0.67	0.95	1.17	1.36	1.68	1.95	2.20	2.69	3.11	3.80	97º	100º	102º
D14	DC45	.218"	0.75	1.07	1.32	1.53	1.89	2.19	2.45	3.00	3.49	4.30	101º	104º	105º
D16	DC45	.250"	0.86	1.25	1.54	1.79	2.20	2.57	2.89	3.54	4.11	5.20	108º	111º	112º
D1	DC46	.031"				0.145	0.178	0.205	0.23	0.28	0.32	0.39		13º	15º
D1.5	DC46	.036"				0.213	0.260	0.300	0.33	0.41	0.46	0.56		15º	17º
D2	DC46	.041"			0.24	0.27	0.33	0.37	0.42	0.50	0.57	0.68		18º	21º
D3	DC46	.047"		0.23	0.28	0.32	0.39	0.45	0.51	0.61	0.70	0.86	14º	20º	24º

(866)775-8089
FAX (701)775-8217

QUICK TURBO FLOODJET WIDE ANGLE FLAT SPRAY TIP

FEATURES:
PATENTED TURBULENCE CHAMBER CREATES A DRAMATIC IMPROVEMENT PATTERN UNIFORMITY.
PRE-ORIFICE DESIGN PRODUCES LARGER DROPLETS FOR REDUCED DRIFT.
LARGE ROUND ORIFICE REDUCES CLOGGING.
GROOVED SIDE MOLDING FOR AUTOMATIC ALIGNMENT WITH ANY QUICK COUPLER.
STAINLESS STEEL WITH COLOR-CODING FOR EASY SIZE IDENTIFICATION.
AVAILABLE IN STANDARD SIZES FROM 1.5 GPM TO 24 GPM AT PRESSURES OF 10 - 40 PSI.

PART	SIZE	PRICE
QCTF-VS-XX	15-80	42.74 **D**
QCTF-VS-XX	100-120	58.34 **D**

OPTIMUM SPRAY HEIGHT	
SPACING	HEIGHT
40”	40”
60”	60”

			GPA							
			4	6	8	10	12	14	16	18
	PSI	GPM	mph	mph	mph	mph	mph	mph	mph	mph
	10	1.50	37	25	18.6	14.9	12.4	10.6	9.3	8.3
	20	2.12	52	35	26	21	17.5	15.0	13.1	11.7
	30	2.60	64	43	32	26	21	18.4	16.1	14.3
QCTF-VS15	40	3.00	74	50	37	30	25	21	18.6	16.5
	10	2.00	50	33	25	19.8	16.5	14.1	12.4	11.0
	20	2.83	70	47	35	28	23	20	17.5	15.6
	30	3.46	86	57	43	34	29	24	21	19.0
QCTF-VS20	40	4.00	99	66	50	40	33	28	25	22
	10	3.00	74	50	37	30	25	21	18.6	16.5
	20	4.24	105	70	52	42	35	30	26	23
	30	5.20	129	86	64	51	43	37	32	29
QCTF-VS30	40	6.00	149	99	74	59	50	42	37	33
	10	4.00	99	66	50	40	33	28	25	22
	20	5.66	140	93	70	56	47	40	35	31
	30	6.93	172	114	86	69	57	49	43	38
QCTF-VS40	40	8.00	198	132	99	79	66	57	50	44
	10	5.00	124	83	62	50	41	35	31	28
	20	7.07	175	117	78	70	58	50	44	39
	30	8.66	214	143	107	86	71	61	54	48
QCTF-VS50	40	10.00	248	165	124	99	83	71	62	55
	10	6.00	149	99	74	59	50	42	37	33
	20	8.49	210	140	105	84	70	60	53	47
	30	10.4	257	172	129	103	86	74	64	57
QCTF-VS60	40	12.0	297	198	149	119	99	85	74	66
	10	8.00	198	132	99	79	66	57	50	44
	20	11.3	280	186	140	112	93	80	70	62
	30	13.9	344	229	172	138	115	98	86	76
QCTF-VS80	40	16.0	396	264	198	158	132	113	99	88
	10	10.0	248	165	124	99	83	71	62	55
	20	14.1	349	233	174	140	116	100	87	78
	30	17.3	428	285	214	171	143	122	107	95
QCTF-VS100	40	20.0	495	330	248	198	165	141	124	110
	10	12.0	297	198	149	119	99	85	74	66
	20	17.0	421	281	210	168	140	120	105	94
	30	20.8	515	343	257	206	172	147	129	114
QCTF-VS120	40	24.0	594	396	297	238	198	170	149	132

OFF-CENTER FLAT SPRAY TIP
SMALL CAPACITIES

***Always verify tips or orifices you received are the size which you require before using with chemical.
Chemical rates need to be obtained from your chemical dealer.***

PART	PRICE
OC-02 THRU OC-16	13.65 D
OC-SS-02 THRU OC-SS-16	20.16 D

TEEJET OFF-CENTER SPRAY TIPS ARE COMMONLY INSTALLED IN DOUBLE AND SINGLE NOZZLE BODIES. BECAUSE THESE BODIES ARE ADJUSTABLE FOR ANGULAR POSITION, A WIDE SPRAY SWATH IS EASILY OBTAINED.
RECOMMENDED SPRAYING PRESSURES ARE 30-60 PSI (2-4 BAR).
AVAILABLE IN STAINLESS STEEL AND BRASS.

			"H" = 18"					"H" = 24"				
			"W"	GPA				"W"	GPA			
	PSI	GPM	in inches	3 mph	4 mph	5 mph	6 mph	in inches	3 mph	4 mph	5 mph	6 mph
	30	0.17	68	5.0	3.7	3.0	2.5	75	4.5	3.4	2.7	2.2
	40	0.20	70	5.7	4.2	3.4	2.8	77	5.1	3.9	3.1	2.6
OC-02	60	0.24	72	6.6	5.0	4.0	3.3	78	6.1	4.6	3.7	3.0
	30	0.26	77	6.7	5.0	4.0	3.3	80	6.4	4.8	3.9	3.2
	40	0.30	80	7.4	5.6	4.5	3.7	83	7.2	5.4	4.3	3.6
OC-03	60	0.37	82	8.9	6.7	5.4	4.5	85	8.6	6.5	5.2	4.3
	30	0.35	91	7.6	5.7	4.6	3.8	93	7.5	5.6	4.5	3.7
	40	0.40	93	8.5	6.4	5.1	4.3	94	8.4	6.3	5.1	4.2
OC-04	60	0.49	94	10.3	7.7	6.2	5.2	95	10.2	7.7	6.1	5.1
	30	0.52	99	10.4	7.8	6.2	5.2	108	9.5	7.2	5.7	4.8
	40	0.60	101	11.8	8.8	7.1	5.9	110	10.8	8.1	6.5	5.4
OC-06	60	0.73	102	14.2	10.6	8.5	7.1	111	13.0	9.8	7.8	6.5
	30	0.69	100	13.7	10.2	8.2	6.8	110	12.4	9.3	7.5	6.2
	40	0.80	102	15.5	11.6	9.3	7.8	112	14.1	10.6	8.5	7.1
OC-08	60	0.98	104	18.7	14.0	11.2	9.3	113	17.2	12.9	10.3	8.6
	30	1.04	102	20	15.1	12.1	10.1	113	18.2	13.7	10.9	9.1
	40	1.20	104	23	17.1	13.7	11.4	115	21	15.5	12.4	10.3
OC-12	60	1.47	105	28	21	16.6	13.9	116	25	18.8	15.1	12.5
	30	1.39	132	21	15.6	12.5	10.4	142	19.4	14.5	11.6	9.7
	40	1.60	138	23	17.2	13.8	11.5	146	22	16.3	13.0	10.8
OC-16	60	1.96	143	27	20	16.3	13.6	148	26	19.7	15.7	13.1

(866)775-8089
FAX (701)775-8217

XPBOOMJET BOOMLESS FLAT SPRAY NOZZLE

PART#	PSI	TWO NOZZLE GPM	24" HEIGHT	NOZZLE SPACING 3" GPA FOR TWO NOZZLES AT MPH 4	6	8	10	15	20	36" HEIGHT	NOZZLE SPACING 3" GPA FOR TWO NOZZLES AT MPH 4	6	8	10	15	20
1/4XP10R 1/4XP10L	20	1.42	17	10.3	6.9	5.2	4.1	2.8	2.1	20	8.8	5.9	4.4	3.5	2.3	1.8
	30	1.74	20	10.8	7.2	5.4	4.3	2.9	2.2	22	9.8	6.5	4.9	3.9	2.6	2
	40	2	22	11.3	7.5	5.6	4.5	3	2.3	25	9.9	6.6	5	4	2.6	2
	50	2.24	25	11.1	7.4	5.5	4.4	3	2.2	27	10.3	6.8	5.1	4.1	2.7	2.1
	60	2.44	26	11.6	7.7	5.8	4.6	3.1	2.3	29	10.4	6.9	5.2	4.2	2.8	2.1
1/4XP20R 1/4XP20L	20	2.84	18	19.5	13	9.8	7.8	5.2	3.9	22	16	10.7	8	6.4	4.3	3.2
	30	3.5	23	18.8	12.6	9.4	7.5	5.2	3.8	24	18	12	9	7.2	4.8	3.6
	40	4	27	18.3	12.2	9.2	7.3	4.9	3.7	28	17.7	11.8	8.8	7.1	4.7	3.5
	50	4.5	29	19.2	12.8	9.6	7.7	5.1	3.8	30	18.6	12.4	9.3	7.4	5	3.7
	60	5	30	21	13.8	10.3	8.3	5.5	4.1	32	19.3	12.9	9.7	7.7	5.2	3.9
1/4XP25R 1/4XP25L	20	3.48	21	21	13.7	10.3	8.2	5.5	4.1	22	19.6	13.1	9.8	7.8	5.2	3.9
	30	4.26	24	22	14.6	11	8.8	5.9	4.4	27	19.5	13	9.8	7.8	5.2	3.9
	40	5	27	23	15.3	11.5	9.2	6.1	4.6	29	21	14.2	10.7	8.5	5.7	4.3
	50	5.5	29	23	15.6	11.7	9.4	6.3	4.7	30	23	15.1	11.3	9.1	6.1	4.5
	60	6	30	25	16.5	12.4	9.9	6.6	5	32	23	15.5	11.6	9.3	6.2	4.6
1/2XP40R 1/2XP40L	20	5.74	22	32	22	16.1	12.9	8.6	6.5	24	30	19.7	14.8	11.8	7.9	5.9
	30	7.06	26	34	22	16.8	13.4	9	6.7	29	30	20	15.1	12.1	8	6
	40	8	2	35	24	17.7	14.1	9.4	7.1	31	32	21	16	12.8	8.5	6.4
	50	9.1	30	38	25	18.8	15	10.1	7.5	32	35	23	17.6	14.1	9.4	7
	60	10	32	39	26	19.3	15.5	10.3	7.7	35	35	24	17.7	14.1	9.4	7.1
1/2XP80R 1/2XP80L	20	11.2	26	53	36	27	21	14.2	10.7	31	45	30	22	17.9	11.9	8.9
	30	13.7	30	57	38	28	23	15.1	11.3	33	51	34	26	21	13.7	10.3
	40	16	32	62	41	31	25	16.5	12.4	35	57	38	28	23	15.1	11.3
	50	17.5	33	66	44	33	26	17.5	13.1	36	60	40	30	24	16	12
	60	19.2	35	68	45	34	27	18.1	13.6	37	64	43	32	26	17.1	12.8

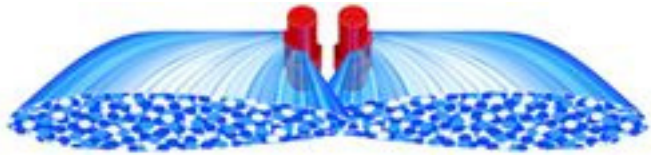

CODE	DESCRIPTION	1/4XP PRICE	1/2XP PRICE
VP	POLYMER	61.43 **D**	73.16 **D**

PART#	PSI	ONE NOZZLE GPM	24" HEIGHT	NOZZLE SPACING 3" GPA FOR ONE NOZZLES AT MPH 4	6	8	10	15	20	36" HEIGHT	NOZZLE SPACING 3" GPA FOR ONE NOZZLES AT MPH 4	6	8	10	15	20
1/4XP10R 1/4XP10L	20	0.71	8.5	10.3	6.9	5.2	4.1	2.8	2.1	10	8.8	5.9	4.4	3.5	2.3	1.8
	30	0.87	10	10.8	7.2	5.4	4.3	2.9	2.2	11	9.8	6.5	4.9	3.9	2.6	2
	40	1	11	11.3	7.5	5.6	4.5	3	2.3	12.5	9.9	6.6	5	4	2.6	2
	50	1.12	12.5	11.1	7.4	5.5	4.4	3	2.2	13.5	10.3	6.8	5.1	4.1	2.7	2.1
	60	1.22	13	11.6	7.7	5.8	4.6	3.1	2.3	14.5	10.4	6.9	5.2	4.2	2.8	2.1
1/4XP20R 1/4XP20L	20	1.42	9	19.5	13	9.8	7.8	5.2	3.9	11	16	10.7	8	6.4	4.3	3.2
	30	1.75	11.5	18.8	12.6	9.4	7.5	5.2	3.8	12	18	12	9	7.2	4.8	3.6
	40	2	13.5	18.3	12.2	9.2	7.3	4.9	3.7	14	17.7	11.8	8.8	7.1	4.7	3.5
	50	2.25	14.5	19.2	12.8	9.6	7.7	5.1	3.8	15	18.6	12.4	9.3	7.4	5	3.7
	60	2.5	15	21	13.8	10.3	8.3	5.5	4.1	16	19.3	12.9	9.7	7.7	5.2	3.9
1/4XP25R 1/4XP25L	20	1.74	10.5	21	13.7	10.3	8.2	5.5	4.1	11	19.6	13.1	9.8	7.8	5.2	3.9
	30	2.13	12	22	14.6	11	8.8	5.9	4.4	13.5	19.5	13	9.8	7.8	5.2	3.9
	40	2.5	13.5	23	15.3	11.5	9.2	6.1	4.6	14.5	21	14.2	10.7	8.5	5.7	4.3
	50	2.75	14.5	23	15.6	11.7	9.4	6.3	4.7	15	23	15.1	11.3	9.1	6.1	4.5
	60	3	16	25	16.5	12.4	9.9	6.6	5	16	23	15.5	11.6	9.3	6.2	4.6
1/2XP40R 1/2XP40L	20	2.87	11	32	22	16.1	12.9	8.6	6.5	12	30	19.7	14.8	11.8	7.9	5.9
	30	3.53	13	34	22	16.8	13.4	9	6.7	14.5	30	20	15.1	12.1	8	6
	40	4	14	35	24	17.7	14.1	9.4	7.1	15.5	32	21	16	12.8	8.5	6.4
	50	4.55	15	38	25	18.8	15	10.1	7.5	16	35	23	17.6	14.1	9.4	7
	60	5	16	39	26	19.3	15.5	10.3	7.7	17.5	35	24	17.7	14.1	9.4	7.1
1/2XP80R 1/2XP80L	20	5.6	13	53	36	27	21	14.2	10.7	15.5	45	30	22	17.9	11.9	8.9
	30	6.83	15	57	38	28	23	15.1	11.3	16.5	51	34	26	21	13.7	10.3
	40	8	16	62	41	31	25	16.5	12.4	17.5	57	38	28	23	15.1	11.3
	50	8.73	16.5	66	44	33	26	17.5	13.1	18	60	40	30	24	16	12
	60	9.6	17.5	68	45	34	27	18.1	13.6	18.5	64	43	32	26	17.1	12.8

EVEN FLAT SPRAY TIP

Always verify tips or orifices you received are the size which you require before using with chemical. Chemical rates need to be obtained from your chemical dealer.

FEATURES:

Ideal for banding over the row or in row middles.
Provides uniform distribution throughout the flat spray pattern.
Easily mounted on spray boom or planter.
Available with VisiFlo color-coding in stainless steel or all stainless steel, hardened stainless steel and brass.

MATERIAL CODE	DESCRIPTION	PRICE
VS	VISIFLO SS	7.65 **D**
SS	STAINLESS STEEL	13.39 **D**
	BRASS	5.23 **D**

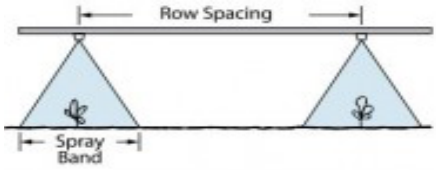

BAND WIDTH	SPRAY HEIGHT BY NOZZLE DEGREE					GPA CONVERSION	
	40°	65°	80°	95°	110°	20”	30”
8”	11”	6”	5”	4”	3”	2.50	3.75
10”	14”	8”	6”	5”	4”	2.00	2.00
12”	16”	9”	7”	5”	4”	1.67	2.50
15”	21”	12”	9”	7”	5”	1.33	2.00

TO FIND GPA RATE ON BAND WIDTHS, MULTIPLY THE TABULATED GPA FOR ROW SPACING BY CONVERSION FACTORS.

	PSI	GPM	GPA FOR 30" SPACING											
			3	3.5	4	4.5	5	5.5	6	6.5	7	7.5	8	8.5
TP4001E*	20	0.07	4.6	4.0	3.5	3.1	2.8	2.5	2.3	2.1	2.0	1.8	1.7	1.6
TP6501E*	30	0.09	5.9	5.1	4.5	4.0	3.6	3.2	3.0	2.7	2.5	2.4	2.2	2.1
ORANGE	40	0.10	6.6	5.7	5.0	4.4	4.0	3.6	3.3	3.0	2.8	2.6	2.5	2.3
TP8001E	50	0.11	7.3	6.2	5.4	4.8	4.4	4.0	3.6	3.4	3.1	2.9	2.7	2.6
TP9501E	60	0.12	7.9	6.8	5.9	5.3	4.8	4.3	4.0	3.7	3.4	3.2	3.0	2.8
TP40015E*	20	0.11	7.3	6.2	5.4	4.8	4.4	4.0	3.6	3.4	3.1	2.9	2.7	2.6
TP65015E*	30	0.13	8.6	7.4	6.4	5.7	5.1	4.7	4.3	4.0	3.7	3.4	3.2	3.0
GREEN	40	0.15	9.9	8.5	7.4	6.6	5.9	5.4	5.0	4.6	4.2	4.0	3.7	3.5
TP80015E	50	0.17	11.2	9.6	8.4	7.5	6.7	6.1	5.6	5.2	4.8	4.5	4.2	4.0
TP95015E	60	0.18	11.9	10.2	8.9	7.9	7.1	6.5	5.9	5.5	5.1	4.8	4.5	4.2
TP4002E*	20	0.14	9.2	7.9	6.9	6.2	5.5	5.0	4.6	4.3	4.0	3.7	3.5	3.3
TP6502E*	30	0.17	11.2	9.6	8.4	7.5	6.7	6.1	5.6	5.2	4.8	4.5	4.2	4.0
YELLOW	40	0.20	13.2	11.3	9.9	8.8	7.9	7.2	6.6	6.1	5.7	5.3	5.0	4.7
TP8002E	50	0.22	14.5	12.4	10.9	9.7	8.7	7.9	7.3	6.7	6.2	5.8	5.4	5.1
TP9502E	60	0.24	15.8	13.6	11.9	10.6	9.5	8.6	7.9	7.3	6.8	6.3	5.9	5.6
TP4003E*	20	0.21	13.9	11.9	10.4	9.2	8.3	7.6	6.9	6.4	5.9	5.5	5.2	4.9
TP6503E*	30	0.26	17.2	14.7	12.9	11.4	10.3	9.4	8.6	7.9	7.4	6.9	6.4	6.1
BLUE	40	0.30	19.8	17.0	14.9	13.2	11.9	10.8	9.9	9.1	8.5	7.9	7.4	7.0
TP8003E	50	0.34	22	19.2	16.8	15.0	13.5	12.2	11.2	10.4	9.6	9.0	8.4	7.9
TP9503E	60	0.37	24	21	18.3	16.3	14.7	13.3	12.2	11.3	10.5	9.8	9.2	8.6
TP4004E*	20	0.28	18.5	15.8	13.9	12.3	11.1	10.1	9.2	8.5	7.9	7.4	6.9	6.5
TP6504E*	30	0.35	23	19.8	17.3	15.4	13.9	12.6	11.6	10.7	9.9	9.2	8.7	8.2
RED	40	0.40	26	23	19.8	17.6	15.8	14.4	13.2	12.2	11.3	10.6	9.9	9.3
TP8004E	50	0.45	30	25	22	19.8	17.8	16.2	14.9	13.7	12.7	11.9	11.1	10.5
TP9504E	60	0.49	32	28	24	22	19.4	17.6	16.2	14.9	13.9	12.9	12.1	11.4
TP4005E*	20	0.35	23	19.8	17.3	15.4	13.9	12.6	11.6	10.7	9.9	9.2	8.7	8.2
TP6505E*	30	0.43	28	24	21	18.9	17.0	15.5	14.2	13.1	12.2	11.4	10.6	10.0
BROWN	40	0.50	33	28	25	22	19.8	18.0	16.5	15.2	14.1	13.2	12.4	11.6
TP8005E	50	0.56	37	32	28	25	22	20	18.5	17.1	15.8	14.8	13.9	13.0
TP9505E	60	0.61	40	35	30	27	24	22	20	18.6	17.3	16.1	15.1	14.2
TP4006E*	20	0.42	38	24	21	18.5	16.6	15.1	13.9	12.8	11.9	11.1	10.4	9.8
TP6506E*	30	0.52	34	29	26	23	21	18.7	17.2	15.8	14.7	13.7	12.9	12.1
GRAY	40	0.60	40	34	30	26	24	22	19.8	18.3	17.0	15.8	14.9	14.0
TP8006E	50	0.67	44	38	33	29	27	24	22	20	19.0	17.7	16.6	15.6
TP9506E	60	0.73	48	41	36	32	29	26	24	22	21	19.3	18.1	17.0
TP4008E*	20	0.57	38	32	28	25	23	21	18.8	17.4	16.1	15.0	14.1	13.3
TP6508E*	30	0.69	46	39	34	30	27	25	23	21	19.5	18.2	17.1	16.1
WHITE	40	0.80	53	45	40	35	32	29	26	24	23	21	19.8	18.6
TP8008E	50	0.89	59	50	44	39	35	32	29	27	25	23	22	21
TP11008E	60	0.98	65	55	49	43	39	35	32	30	28	26	24	23
TP4010E*	20	0.71	47	40	35	31	28	26	23	22	20	18.7	17.6	16.5
TP6510E*	30	0.87	57	49	43	38	34	31	29	27	25	23	22	20
TP8010E*	40	1.00	66	57	50	44	40	36	33	30	28	26	25	23
TP11010E*	50	1.12	74	63	55	49	44	40	37	34	32	30	28	26
	60	1.22	81	69	60	54	48	44	40	37	35	32	30	28
TP4015E*	20	1.06	70	60	52	47	42	38	35	32	30	28	26	25
TP6515E*	30	1.30	86	74	64	57	51	47	43	40	37	34	32	30
TP8015E*	40	1.50	99	85	74	66	59	54	50	46	42	40	37	35
TP11015E*	50	1.68	111	95	83	74	67	60	55	51	48	44	42	39
	60	1.84	121	104	91	81	73	66	61	56	52	49	46	43

(866)775-8089
FAX (701)775-8217

DRIFT GUARD
EVEN FLAT SPRAY TIP

Always verify tips or orifices you received are the size which you require before using with chemical. Chemical rates need to be obtained from your chemical dealer.

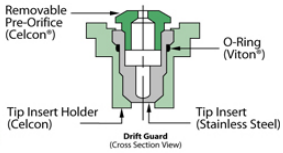

FEATURES:

**PRE-ORIFICE DESIGN PRODUCES LARGE DROPLETS TO REDUCE DRIFT.

**IDEAL FOR BANDING OVER THE ROW OR IN ROW MIDDLES.

**PROVIDES UNIFORM DISTRIBUTION THROUGHOUT THE FLAT SPRAY PATTERN.

**EASILY MOUNTED ON SPRAY BOOM OR PLANTER.

DG TEEJET DRIFT GUARD $11.83 D

BAND WIDTH	HEIGHT 95°	GPA CONVERSION FACTOR 30”
8”	4”	3.8
10”	5”	3.0
12”	5”	2.5
15”	7”	2.0
18”	8”	1.7

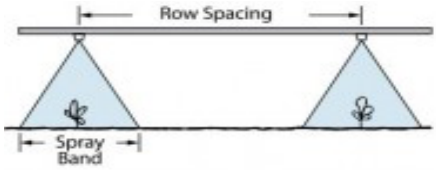

TO FIND GPA RATE ON BAND WIDTHS, MULTIPLY THE TABULATED GPA FOR ROW SPACING BY CONVERSION FACTORS.

				GPA FOR 30” SPACING					
	PSI	GPM	OZ/ MIN.	3 mph	4 mph	5 mph	6 mph	7 mph	8 mph
	30	0.13	17	8.6	6.4	5.1	4.3	3.7	3.2
	40	0.15	19	9.9	7.4	5.9	5.0	4.2	3.7
	50	0.17	22	11.2	8.4	6.7	5.6	4.8	4.2
DG95015EVS	60	0.18	23	11.9	8.9	7.1	5.9	5.1	4.5
	30	0.17	22	11.2	8.4	6.7	5.6	4.8	4.2
	40	0.2	26	13.2	9.9	7.9	6.6	5.7	5.0
	50	0.22	28	14.5	10.9	8.7	7.3	6.2	5.4
DG9502EVS	60	0.24	31	15.8	11.9	9.5	7.9	6.8	5.9
	30	0.26	33	17.2	12.9	10.3	8.6	7.4	6.4
	40	0.3	38	19.8	14.9	11.9	9.9	8.5	7.4
	50	0.34	44	22	16.8	13.5	11.2	9.6	8.4
DG9503EVS	60	0.37	47	24	18.3	14.7	12.2	10.5	9.2
	30	0.35	45	23	17.3	13.9	11.6	9.9	8.7
	40	0.4	51	26	19.8	15.8	13.2	11.3	9.9
	50	0.45	58	30	22	17.8	14.9	12.7	11.1
DG9504EVS	60	0.49	63	32	24	19.4	16.2	13.9	12.1
	30	0.43	55	28	21	17.0	14.2	12.2	10.6
	40	0.5	64	33	25	19.8	16.5	14.1	12.4
	50	0.56	72	37	28	22	18.5	15.8	13.9
DG9505EVS	60	0.61	78	40	30	24	20	17.3	15.1

AIR INDUCTION EVEN FLAT SPRAY TIP

Always verify tips or orifices you received are the size which you require before using with chemical. Chemical rates need to be obtained from your chemical dealer.

FEATURES:

*POLYMER INSERT HOLDER AND PRE-ORIFICE WITH VISIFLO COLOR-CODING.
*LARGER DROPLETS FOR LESS DRIFT.
*DEPENDING ON THE CHEMICAL, PRODUCES LARGE AIR-FILLED DROPS THROUGH THE USE OF A VENTURI AIR ASPIRATOR.

BAND WIDTH	HEIGHT 95º	GPA CONVERSION FACTOR 30”
8”	4”	3.8
10”	5”	3.0
12”	5”	2.5
15”	7”	2.0
18”	8”	1.7

AI TEEJET EVEN $16.71 D

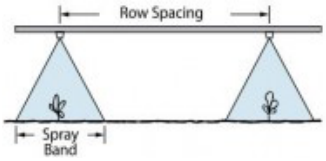

TO FIND GPA RATE ON BAND WIDTHS, MULTIPLY THE TABULATED GPA FOR ROW SPACING BY CONVERSION FACTORS.

	PSI	1 NOZZLE GPM	1 NOZZLE OZ/ MIN.	GPA FOR 30" SPACING 4 mph	6 mph	8 mph	10 mph	12 mph	14 mph	16 mph	18 mph
AI95015EVS GREEN	30	0.13	17	6.4	4.3	3.2	2.6	2.1	1.8	1.6	1.4
	40	0.15	19	7.4	5.0	3.7	3.0	2.5	2.1	1.9	1.7
	50	0.17	22	8.4	5.6	4.2	3.4	2.8	2.4	2.1	1.9
	60	0.18	23	8.9	5.9	4.5	3.6	3.0	2.5	2.2	2.0
	70	0.20	26	9.9	6.6	5.0	4.0	3.3	2.8	2.5	2.2
	80	0.21	27	10.4	6.9	5.2	4.2	3.5	3.0	2.6	2.3
	90	0.23	29	11.4	7.6	5.7	4.6	3.8	3.3	2.8	2.5
	100	0.24	31	11.9	7.9	5.9	4.8	4.0	3.4	3.0	2.6
AI9502EVS YELLOW	30	0.17	22	8.4	5.6	4.2	3.4	2.8	2.4	2.1	1.9
	40	0.20	26	9.9	6.6	5.0	4.0	3.3	2.8	2.5	2.2
	50	0.22	28	10.9	7.3	5.4	4.4	3.6	3.1	2.7	2.4
	60	0.24	31	11.9	7.9	5.9	4.8	4.0	3.4	3.0	2.6
	70	0.26	33	12.9	8.6	6.4	5.1	4.3	3.7	3.2	2.9
	80	0.28	36	13.9	9.2	6.9	5.5	4.6	4.0	3.5	3.1
	90	0.30	38	14.9	9.9	7.4	5.9	5.0	4.2	3.7	3.3
	100	0.32	41	15.8	10.6	7.9	6.3	5.3	4.5	4.0	3.5
AI95025EVS TEAL	30	0.22	28	10.9	7.3	5.4	4.4	3.6	3.1	2.7	2.4
	40	0.25	32	12.4	8.3	6.2	5.0	4.1	3.5	3.1	2.8
	50	0.28	36	13.9	9.2	6.9	5.5	4.6	4.0	3.5	3.1
	60	0.31	40	15.3	10.2	7.7	6.1	5.1	4.4	3.8	3.4
	70	0.33	42	16.3	10.9	8.2	6.5	5.4	4.7	4.1	3.6
	80	0.35	45	17.3	11.6	8.7	6.9	5.8	5.0	4.3	3.9
	90	0.38	49	18.8	12.5	9.4	7.5	6.3	5.4	4.7	4.2
	100	0.40	51	19.8	13.2	9.9	7.9	6.6	5.7	5.0	4.4
AI9503EVS BLUE	30	0.26	33	12.9	8.6	6.4	5.1	4.3	3.7	3.2	2.9
	40	0.30	38	14.9	9.9	7.4	5.9	5	4.2	3.7	3.3
	50	0.34	44	16.8	11.2	8.4	6.7	5.6	4.8	4.2	3.7
	60	0.37	47	18.3	12.2	9.2	7.3	6.1	5.2	4.6	4.1
	70	0.40	51	19.8	13.2	9.9	7.9	6.6	5.7	5.0	4.4
	80	0.42	54	21	13.9	10.4	8.3	6.9	5.9	5.2	4.6
	90	0.45	58	22	14.9	11.1	8.9	7.4	6.4	5.6	5.0
	100	0.47	60	23	15.5	11.6	9.3	7.8	6.6	5.8	5.2
AI9504EVS RED	30	0.35	45	17.3	11.6	8.7	6.9	5.8	5.0	4.3	3.9
	40	0.40	51	19.8	13.2	9.9	7.9	6.6	5.7	5.0	4.4
	50	0.45	58	22	14.9	11.1	8.9	7.4	6.4	5.6	5.0
	60	0.49	63	24	16.2	12.1	9.7	8.1	6.9	6.1	5.4
	70	0.53	68	26	17.5	13.1	10.5	8.7	7.5	6.6	5.8
	80	0.57	73	28	18.8	14.1	11.3	9.4	8.1	7.1	6.3
	90	0.60	77	30	19.8	14.9	11.9	9.9	8.5	7.4	6.6
	100	0.63	81	31	21	15.6	12.5	10.4	8.9	7.8	6.9
AI9504EVS BROWN	30	0.43	55	21	14.2	10.6	8.5	7.1	6.1	5.3	4.7
	40	0.50	64	25	16.5	12.4	9.9	8.3	7.1	6.2	5.5
	50	0.56	72	28	18.5	13.9	11.1	9.2	7.9	6.9	6.2
	60	0.61	78	30	20	15.1	12.1	10.1	8.6	7.5	6.7
	70	0.66	84	33	22	16.3	13.1	10.9	9.3	8.2	7.3
	80	0.71	91	35	23	17.6	14.1.	11.7	10.0	8.8	7.8
	90	0.75	96	37	25	18.6	14.9	12.4	10.6	9.3	8.3
	100	0.79	101	39	26	19.6	15.6	13.0	11.2	9.8	8.7

(866)775-8089
FAX (701)775-8217

TWINJET
EVEN FLAT SPRAY TIP

***Always verify tips or orifices you received are the size which you require before using with chemical
Chemical rates need to be obtained from your chemical dealer.***

TWINJET EVEN FLAT $20.71 D

FEATURES:
IDEAL FOR BANDING OVER OR BETWEEN CROP ROWS.
PROVIDES UNIFORM DISTRIBUTION THROUGHOUT THE SPRAY PATTERN.
AVAILABLE IN 80 AND 40 DEGREE TWIN FLAT SPRAY PATTERN.

	SPRAY HEIGHT BY		GPA
BAND	NOZZLE DEGREE		CONVERSION
WIDTH	40º	80º	30”
8”	11”	5”	3.8
10”	14”	6”	3.0
12”	16”	7”	2.5
15”	21”	9”	2.0

TO FIND GPA RATE ON BAND WIDTHS, MULTIPLY THE TABULATED GPA FOR ROW SPACING BY CONVERSION FACTORS.

40 AND 80 DEGREE E SERIES

TwinJet even tips combine the advantages of twin flat spray patterns with even distribution across the pattern. The twin flat sprays provide improved coverage of crop or weed without sacrificing uniformity. The small droplet size makes this tip ideal for providing a through, penetrating coverage with post-emergence contact herbicides.

	PSI	1 NOZZLE GPM	1 NOZZLE OZ/ MIN.	GPA FOR 30” SPACING					
				3 mph	4 mph	5 mph	6 mph	7 mph	8 mph
TJ60-4002EVS TJ60-8002EVS	20	0.1	18	9.2	6.9	5.5	4.6	4.0	3.5
	30	0.2	22	11.2	8.4	6.7	5.6	4.8	4.2
	40	0.2	26	13.2	9.9	7.9	6.6	5.7	5.0
	50	0.2	28	14.5	10.9	8.7	7.3	6.2	5.4
TJ60-4003EVS TJ60-8003EVS	20	0.2	27	13.9	10.4	8.3	6.9	5.9	5.2
	30	0.3	33	17.2	12.9	10.3	8.6	7.4	6.4
	40	0.3	38	19.8	14.9	11.9	9.9	8.5	7.4
	50	0.3	44	22	16.8	13.5	11.2	9.6	8.4
TJ60-4004EVS TJ60-8004EVS	20	0.3	36	18.5	13.9	11.1	9.2	7.9	6.9
	30	0.4	45	23	17.3	13.9	11.6	9.9	8.7
	40	0.4	51	26	19.8	15.8	13.2	11.3	9.9
	50	0.5	58	30	22	17.8	14.9	12.7	11.1
TJ60-8006EVS	20	0.4	54	28	21	16.6	13.9	11.9	10.4
	30	0.5	67	34	26	21	17.2	14.7	12.9
	40	0.6	77	40	30	24	19.8	17.0	14.9
	50	0.7	86	44	33	27	22	19.0	16.6

CONEJET VISIFLO HOLLOW CONE SPRAY TIP

Always verify tips or orifices you received are the size which you require before using with chemical. Chemical rates need to be obtained from your chemical dealer.

MATERIAL CODE	DESCRIPTION	PRICE
TX-VSX	VISIFLO SS	8.07 **D**
TX-X	BRASS	7.22 **D**
TX-SSX	STAINLESS	45.16 **D**
TX-VKX	CERAMIC	7.31 **D**

BAND WIDTH	GPA CONVERSION
8”	3.8
10”	3.0
12”	2.5
15”	2.0
18”	1.7

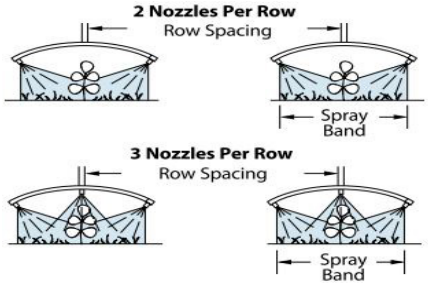

TO FIND GPA RATE ON BAND WIDTHS, MULTIPLY THE TABULATED GPA FOR ROW SPACING BY CONVERSION FACTORS.

FEATURES:

VISIFLO SS OR CERAMIC ORIFICE IN POLY BODY.
SPRAY ANGLE 80 DEGREE.
MAX PRESSURE 300PSI.
IDEAL ROW BANDING WITH 2 OR 3 NOZZLES.

	PSI	2 NOZZLE GPM	2 NOZZLE OZ/MIN.	3 mph	4 mph	5 mph	6 mph	7 mph	PSI	3 NOZZLE GPM	3 NOZZLE OZ/MIN.	3 mph	4 mph	5 mph	6 mph	7 mph
TX-SS1	40	0.033	4.2	2.2	1.6	1.3	1.1	0.93	40	0.050	6.4	3.3	2.5	2.0	1.7	1.4
	60	0.039	5.0	2.6	1.9	1.5	1.3	1.1	60	0.059	7.6	3.9	2.9	2.3	1.9	1.7
	75	0.043	5.5	2.8	2.1	1.7	1.4	1.2	75	0.065	8.3	4.3	3.2	2.6	2.1	1.8
	90	0.047	6.0	3.1	2.3	1.9	1.6	1.3	90	0.070	9.0	4.6	3.5	2.8	2.3	2.0
	120	0.053	6.8	3.5	2.6	2.1	1.7	1.5	120	0.079	10	5.2	3.9	3.1	2.6	2.2
TX-SS2	40	0.067	8.6	4.4	3.3	2.7	2.2	1.9	40	0.100	13	6.6	5.0	4.0	3.3	2.8
	60	0.080	10	5.3	4.0	3.2	2.6	2.3	60	0.12	15	7.9	5.9	4.8	4.0	3.4
	75	0.088	11	5.8	4.4	3.5	2.9	2.5	75	0.13	17	8.6	6.4	5.1	4.3	3.7
	90	0.095	12	6.3	4.7	3.8	3.1	2.7	90	0.14	18	9.2	6.9	5.5	4.6	4.0
	120	0.11	14	7.3	5.4	4.4	3.6	3.1	120	0.16	20	10.6	7.9	6.3	5.3	4.5
TX-SS3	40	0.10	13	6.6	5.0	4.0	3.3	2.8	40	0.15	19	9.9	7.4	5.9	5.0	4.2
TX-VS3 YELLOW	60	0.12	15	7.9	5.9	4.8	4.0	3.4	60	0.18	23	11.9	8.9	7.1	5.9	5.1
	75	0.13	17	8.6	6.4	5.1	4.3	3.7	75	0.20	26	13.2	9.9	7.9	6.6	5.7
	90	0.14	18	9.2	6.9	5.5	4.6	4.0	90	0.21	27	13.9	10.4	8.3	6.9	5.9
	120	0.16	20	10.6	7.9	6.3	5.3	4.5	120	0.24	31	15.8	11.9	9.5	7.9	6.8
TX-SS4	40	0.13	17	8.6	6.4	5.1	4.3	3.7	40	0.20	26	13.2	9.9	7.9	6.6	5.7
TX-VS4 GREEN	60	0.16	20	10.6	7.9	6.3	5.3	4.5	60	0.24	31	15.8	11.9	9.5	7.9	6.8
	75	0.18	23	11.9	8.9	7.1	5.9	5.1	75	0.27	35	17.8	13.4	10.7	8.9	7.6
	90	0.19	24	12.5	9.4	7.5	6.3	5.4	90	0.29	37	19.1	14.4	11.5	9.6	8.2
	120	0.22	28	14.5	10.9	8.7	7.3	6.2	120	0.33	42	22	16.3	13.1	10.9	9.3
TX-SS6	40	0.20	26	13.2	9.9	7.9	6.6	5.7	40	0.30	38	19.8	14.9	11.9	9.9	8.5
TX-VS6 RED	60	0.24	31	15.8	11.9	9.5	7.9	6.8	60	0.36	46	24	17.8	14.3	11.9	10.2
	75	0.27	35	17.8	13.4	10.7	8.9	7.6	75	0.40	51	26	19.8	15.8	13.2	11.3
	90	0.29	37	19.1	14.4	11.5	9.6	8.2	90	0.43	55	28	21	17.0	14.2	12.1
	120	0.33	42	22	16.3	13.1	10.9	9.3	120	0.50	64	33	25	19.8	16.5	14.1
TX-SS8	40	0.27	35	17.8	13.4	10.7	8.9	7.6	40	0.40	51	26	19.8	15.8	13.2	11.3
TX-VS8 GREY	60	0.32	41	21	15.8	12.7	10.6	9.1	60	0.49	63	32	24	19.4	16.2	13.9
	75	0.36	46	24	17.8	14.3	11.9	10.2	75	0.54	69	36	27	21	17.8	15.3
	90	0.39	50	26	19.3	15.4	12.9	11.0	90	0.59	76	39	29	23	19.5	16.7
	120	0.45	58	30	22	17.8	14.9	12.7	120	0.68	87	45	34	27	22	19.2
TX-SS10	40	0.33	42	22	16.3	13.1	10.9	9.3	40	0.50	64	33	25	19.8	16.5	14.1
TX-VS10 BLACK	60	0.40	51	26	19.8	15.8	13.2	11.3	60	0.61	78	40	30	24	20	17.3
	75	0.45	58	30	22	17.8	14.9	12.7	75	0.68	87	45	34	27	22	19.2
	90	0.49	63	32	24	19.4	16.2	13.9	90	0.74	95	49	37	29	24	21
	120	0.56	72	37	28	22	18.5	15.8	120	0.85	109	56	42	34	28	24
TX-SS12	40	0.40	51	26	19.8	15.8	13.2	11.3	40	0.60	77	40	30	24	19.8	17.0
TX-VS12 BROWN	60	0.49	63	32	24	19.4	16.2	13.9	60	0.73	93	48	36	29	24	21
	75	0.54	69	36	27	21	17.8	15.3	75	0.81	104	53	40	32	27	23
	90	0.59	76	39	29	23	19.5	16.7	90	0.88	113	58	44	35	29	25
	120	0.68	87	45	34	27	22	19.2	120	1.01	129	67	50	40	33	29
TX-SS18	40	0.60	77	40	30	24	19.8	17.0	40	0.90	115	59	45	36	30	25
TX-VS18 ORANGE	60	0.73	93	48	36	29	24	21	60	1.10	141	73	54	44	36	31
	75	0.82	105	54	41	32	27	23	75	1.23	157	81	61	49	41	35
	90	0.90	115	59	45	36	30	25	90	1.35	173	89	67	53	45	38
	120	1.03	132	68	51	41	34	29	120	1.55	198	102	77	61	51	44
TX-SS26	40	0.87	111	57	43	34	29	25	40	1.30	166	86	64	51	43	37
TX-VS26 BLUE	60	1.06	136	70	52	42	35	30	60	1.59	204	105	79	63	52	45
	75	1.18	151	78	58	47	39	33	75	1.78	228	117	88	70	59	50
	90	1.30	166	86	64	51	43	37	90	1.94	248	128	96	77	64	55
	120	1.49	191	98	74	59	49	42	120	2.24	287	148	111	89	74	63

(866)775-8089
FAX (701)775-8217

FULL CONE & UNDERLEAF BANDING SPRAY TIP

	PSI	GPM	1 NOZZLE OZ/MIN.	GPA 48" SPACING (THREE NOZZLEAS PER ROW)			
				2 mph	3 mph	4 mph	5 mph
TG-1	20	0.14	18	26	17.3	13.0	10.4
	30	0.16	20	30	19.8	14.9	11.9
	40	0.19	24	35	24	17.6	14.1
	60	0.23	29	43	28	21	17.1
TG-2	20	0.28	36	52	35	26	21
	30	0.33	42	61	41	31	25
	40	0.38	49	71	47	35	28
	60	0.46	59	85	57	43	34
TG-3	20	0.41	52	76	51	38	30
	30	0.50	64	93	62	46	37
	40	0.57	73	106	71	53	42
	60	0.68	87	126	84	63	50
TG-4	20	0.55	70	102	68	51	41
	30	0.66	84	123	82	61	49
	40	0.76	97	141	94	71	56
	60	0.91	116	169	113	84	68
TG-5	20	0.69	88	128	85	64	51
	30	0.84	108	156	104	78	62
	40	1.00	128	186	124	93	74
	60	1.16	148	215	144	108	86
TG-6	20	0.82	105	152	101	76	61
	30	0.99	127	184	123	92	74
	40	1.14	146	212	141	106	85
	60	1.37	175	254	170	127	102
TG-8	20	1.10	141	204	136	102	82
	30	1.33	170	247	165	123	99
	40	1.51	193	280	187	140	112
	60	1.82	233	338	225	169	135

TG-1 THRU TG-8
$11.12 **D**

3 NOZZLES PER ROW

PROVIDES COARSE SPRAY WITH FULL CONE PATTERN. USED FREQUENTLY FOR TOBACCO PLANT SUCKER CONTROL.

UB-UNDERLEAF BANDING SPRAY TIPS

UB-UNDERLEAF TIPS	PRICE
STAINLESS	34.52 **D**
BRASS	18.15 **D**

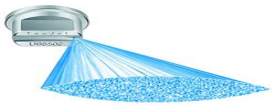

2 NOZZLES PER ROW

	PSI	2 NOZZLE GPM	2 NOZZLE OZ/MIN.	2 mph	3 mph	4 mph	5 mph	6 mph	7 mph
D25143-UB 850075	20	0.11	14	10.9	7.3	5.4	4.4	3.6	3.1
	30	0.13	17	12.9	8.6	6.4	5.1	4.3	3.7
	40	0.15	19	14.9	9.9	7.4	5.9	5.0	4.2
	50	0.17	22	16.9	11.2	8.4	6.7	5.6	4.8
	60	0.18	23	17.8	11.9	8.9	7.1	5.9	5.1
D25143-UB 8501	20	0.14	18	13.9	9.2	6.9	5.5	4.6	4
	30	0.17	22	16.8	11.2	8.4	6.7	5.6	4.8
	40	0.20	26	19.8	13.2	9.9	7.9	6.6	5.7
	50	0.22	28	22	14.5	10.9	8.7	7.3	6.2
	60	0.24	31	24	15.8	11.9	9.5	7.9	6.8
D25143-UB 85015	20	0.21	27	21	13.9	10.4	8.3	6.9	5.9
	30	0.26	33	26	17.2	12.9	10.3	8.6	7.4
	40	0.30	38	30	19.8	14.9	11.9	9.9	8.5
	50	0.34	44	34	22	16.8	13.5	11.2	9.6
	60	0.37	47	37	24	18.3	14.7	12.2	10.5
D25143-UB 8502	20	0.28	36	28	18.5	13.9	11.1	9.2	7.9
	30	0.35	45	35	23	17.3	13.9	11.6	9.9
	40	0.40	51	40	26	19.8	15.8	13.2	11.3
	50	0.45	58	45	30	22	17.8	14.9	12.7
	60	0.49	63	49	32	24	19.4	16.2	13.9
D25143-UB 8503	20	0.42	54	42	28	21	16.6	13.9	11.9
	30	0.52	67	51	34	26	21	17.2	14.7
	40	0.60	77	59	40	30	24	19.8	17.0
	50	0.67	86	66	44	33	27	22	19.0
	60	0.73	93	72	48	36	29	24	21
D25143-UB 8504	20	0.57	73	56	38	28	23	18.8	16.1
	30	0.69	88	68	46	34	27	23	19.5
	40	0.80	102	79	53	40	32	26	23
	50	0.89	114	88	59	44	35	29	25
	60	0.98	125	97	65	49	39	32	28

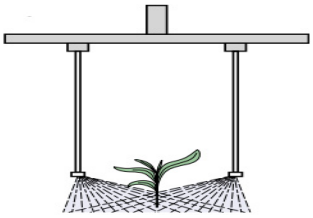

OFF CENTER TIP WITH TAPERED FLAT SPRAY CHARACTERISTICS.
85 DEGREE SPRAY ANGLE.
IN BRASS OR STAINLESS.
OPERATING PRESSURE IS 20 TO 60 PSI.

DIRECTED APPLICATION UNDER CROP CANOPY. NOZZLE SPACING 10”-2 TIPS PER ROW. ADJUST TIP HEIGHT AND NOZZLE ORIENTATION TO ACHIEVE DESIRED BAND WIDTH.

FLOW REGULATORS

Always verify tips or orifices you received are the size which you require before using with chemical. Chemical rates need to be obtained from your chemical dealer.

FLOW REGULATORS ARE USUALLY MOUNTED BEHIND CULTIVATOR SHANKS FOR THE SUBSURFACE APPLICATION OF LIQUID FERTILIZERS AND SOIL FUMIGANTS. THEY ARE ALSO USED FOR ABOVE-GROUND STREAMING APPLICATIONS.

NOTE: Always insert Orifice Plate with side marked with number facing the outlet.

ORIFICE PLATES - CP4916-8 THRU CP4916-250 $3.87 D

TO DETERMINE THE ORIFICE PLATE NEEDED USE THE FOLLOWING EQUATION:

W = Nozzle spacing (in inches) for broadcast spraying.
= Spray width (in inches) for single nozzle, band spraying or boomless spraying.
= Row spacing (in inches) divided by the number of nozzles per row for directed spraying.

ORIFICE PLATE	GPM 5 PSI	10 PSI	20 PSI	30 PSI
CP4916-8	0.003	0.004	0.006	0.007
CP4916-10	0.005	0.006	0.009	0.011
CP4916-12	0.007	0.009	0.013	0.016
CP4916-14	0.009	0.013	0.018	0.022
CP4916-15	0.010	0.014	0.020	0.025
CP4916-16	0.012	0.016	0.023	0.028
CP4619-18	0.015	0.021	0.030	0.036
CP4916-20	0.018	0.026	0.037	0.045
CP4916-22	0.022	0.031	0.043	0.053
CP4916-24	0.026	0.037	0.052	0.064
CP4916-25	0.028	0.040	0.056	0.068
CP4916-26	0.030	0.043	0.060	0.074
CP4916-27	0.032	0.045	0.064	0.078
CP4916-28	0.035	0.049	0.069	0.085
CP4916-29	0.038	0.054	0.076	0.093
CP4916-30	0.040	0.057	0.081	0.099
CP4916-31	0.043	0.061	0.087	0.106
CP4916-32	0.048	0.067	0.095	0.116
CP4916-34	0.052	0.074	0.104	0.127
CP4916-35	0.056	0.079	0.111	0.136
CP4916-37	0.061	0.086	0.121	0.149
CP4916-39	0.067	0.095	0.135	0.165
CP4916-40	0.072	0.102	0.144	0.177
CP4916-41	0.074	0.105	0.149	0.182
CP4916-43	0.081	0.115	0.163	0.200
CP4916-45	0.088	0.125	0.176	0.216
CP4916-46	0.095	0.135	0.191	0.233

ORIFICE PLATE	GPM 5 PSI	10 PSI	20 PSI	30PSI
CP4916-47	0.097	0.137	0.194	0.238
CP4916-48	0.101	0.143	0.202	0.247
CP4916-49	0.104	0.147	0.208	0.026
CP4916-51	0.116	0.164	0.232	0.284
CP4916-52	0.118	0.167	0.237	0.290
CP4916-54	0.127	0.180	0.255	0.312
CP4916-55	0.133	0.188	0.266	0.326
CP4916-57	0.141	0.200	0.283	0.346
CP4916-59	0.152	0.215	0.304	0.372
CP4916-61	0.166	0.233	0.330	0.404
CP4916-63	0.174	0.246	0.347	0.425
CP4916-65	0.185	0.261	0.369	0.452
CP4916-67	0.196	0.278	0.392	0.481
CP4916-68	0.203	0.287	0.405	0.496
CP4916-70	0.216	0.306	0.433	0.530
CP4916-72	0.226	0.320	0.453	0.554
CP4916-73	0.233	0.330	0.467	0.572
CP4916-75	0.245	0.347	0.491	0.601
CP4916-78	0.272	0.385	0.544	0.667
CP4916-80	0.280	0.397	0.561	0.687
CP4916-81	0.290	0.411	0.581	0.711
CP4916-83	0.317	0.449	0.634	0.777
CP4916-86	0.332	0.470	0.664	0.813
CP4916-89	0.346	0.490	0.693	0.849
CP4916-91	0.369	0.523	0.739	0.905
CP4916-93	0.387	0.547	0.774	0.947
CP4916-95	0.404	0.572	0.808	0.990

ORIFICE PLATE	GPM 5 PSI	10 PSI	20 PSI	30 PSI
CP4916-98	0.442	0.625	0.884	1.08
CP4916-103	0.461	0.653	0.923	1.13
CP4916-107	0.518	0.733	1.04	1.27
CP4916-110	0.548	0.775	1.10	1.34
CP4916-115	0.605	0.855	1.21	1.48
CP4916-120	0.629	0.890	1.26	1.54
CP4916-125	0.693	0.980	1.39	1.70
CP4916-128	0.721	1.02	1.44	1.77
CP4916-132	0.774	1.10	1.55	1.90
CP4916-136	0.840	1.19	1.68	2.06
CP4916-140	0.894	1.27	1.79	2.19
CP4916-144	0.926	1.31	1.85	2.27
CP4916-147	0.953	1.35	1.91	2.33
CP4916-151	1.04	1.47	2.08	2.55
CP4916-156	1.10	1.55	2.20	2.69
CP4916-161	1.15	1.63	2.31	2.83
CP4916-166	1.21	1.72	2.43	2.97
CP4916-170	1.30	1.84	2.61	3.19
CP4916-172	1.36	1.92	2.71	3.32
CP4916-177	1.41	2.00	2.83	3.46
CP4916-182	1.47	2.08	2.95	3.61
CP4916-187	1.56	2.21	3.12	3.82
CP4916-196	1.73	2.45	3.46	4.24
CP4916-205	1.88	2.65	3.75	4.59
CP4916-218	2.11	2.98	4.21	5.16
CP4916-234	2.45	3.47	4.91	6.01
CP4916-250	2.83	4.00	5.66	6.93

(866)775-8089
FAX (701)775-8217

QUICK TEEJET NOZZLE BODIES FOR DRY BOOM

QJ360 NOZZLE BODY SERIES

- AVAILABLE WITH EITHER 3, 4 OR 5 POSITIONS FOR EASY CHANGE OF SPRAY TIPS OR QUICK BOOM FLUSHING.
- MAXIMUM OPERATING PRESSURE FOR 300PSI (20 BARS).
- POSITIVE SHUTOFF BETWEEN EACH SPRAY POSITION.
- AVAILABLE IN 1/2", 3/4" OR 1" SINGLE OR DOUBLE HOSE SHANKS.
- INCLUDES CHEMSAVER DIAPHRAGM CHECK VALVE FOR DRIP FREE SHUTOFF.
- DURABLE DESIGN MOUNTS BODY HIGH ON BOOM STRUCTURE FOR MAXIMUM PROTECTION.
- STANDARD EPDM DIAPHRAGM WITH VITON AVAILABLE AS AN OPTION.

PART#		NUMBER OF	TO FIT	
SINGLE	DOUBLE	OUTLETS	HOSE ID	PRICE
QJ363C-500-1-NYB	QJ363C-500-2-NYB	3	1/2"	29.09 **V**
QJ363C-750-1-NYB	QJ363C-750-2-NYB	3	3/4"	29.09 **V**
QJ363C-1000-1-NYB	QJ363C-1000-2-NYB	3	1"	29.09 **V**

QJ363C

PART#		NUMBER OF	TO FIT	
SINGLE	DOUBLE	OUTLETS	HOSE ID	PRICE
QJ364C-500-1-NYB	QJ364C-500-2-NYB	4	1/2"	29.09 **V**
QJ364C-750-1-NYB	QJ364C-750-2-NYB	4	3/4"	29.09 **V**
QJ364C-1000-1-NYB	QJ364C-1000-2-NYB	4	1"	29.09 **V**

QJ364C

PART#		NUMBER OF	TO FIT	
SINGLE	DOUBLE	OUTLETS	HOSE ID	PRICE
QJ365C-500-1-NYB	QJ365C-500-2-NYB	5	1/2"	29.09 **V**
QJ365C-750-1-NYB	QJ365C-750-2-NYB	5	3/4"	29.09 **V**
QJ365C-1000-1-NYB	QJ365C-1000-2-NYB	5	1"	29.09 **V**

QJ365C

TRIPLE NOZZLE BODY FOR DRY BOOM

* PROVIDES 3 POSITIONS FOR EASY CHANGE OF SPRAY TIPS OR QUICK BOOM FLUSHING.
* MAXIMUM OPERATING PRESSURE OF 125PSI (9 BAR).
* POSITIVE SHUTOFF BETWEEN EACH SPRAY POSITION.
* AVAILABLE IN 1/2" & 3/4" SINGLE OR DOUBLE HOSE SHANKS.
* INCLUDES CHEMSAVER DIAPHRAGM CHECK VALVE FOR DRIP FREE SHUTOFF.
* CAN BE USED WITH ALL QUICK TEEJET CAPS.
* STANDARD EPDM DIAPHRAGM WITH VITON AVAILABLE AS AN OPTION.

PART#		TO FIT	
SINGLE	DOUBLE	HOSE ID	PRICE
24230A-1-540-NYB	24230A-2-540-NYB	1/2"	32.02 **V**
24230A-1-785-NYB	24230A-2-785-NYB	3/4"	32.02 **V**

QUICK TEEJET NOZZLE BODIES FOR DRY BOOM

QJ100 SERIES
QUICK TEEJET NOZZLE ASSEMBLIES

Hose barb size to fit 3/8", 1/2" & 3/4" hose.
Available in single, double & triple hose shanks.
Maximum operating pressure 125psi (9 bar).

PART# SINGLE	HOSE ID	PRICE
18635-111-406-NYB	3/8"	6.05 **V**
18638-111-540-NYB	1/2"	6.05 **V**
18719-111-785-NYB	3/4"	6.05 **V**

PART# DOUBLE	HOSE ID	PRICE
18636-112-406-NYB	3/8"	6.05 **V**
18639-112-540-NYB	1/2"	6.05 **V**
18720-112-785-NYB	3/4"	6.05 **V**

PART# TRIPLE	HOSE ID	PRICE
18637-113-406-NYB	3/8"	6.05 **V**
18640-113-540-NYB	1/2"	6.05 **V**
18721-113-785-NYB	3/4"	6.05 **V**

QJ200 SERIES
DIAPHRAGM CHECK VALVE
QUICK TEEJET NOZZLE ASSEMBLIES

Drip-free shutoff. Opening pressure 10psi.
Standard diaphragm EPDM, Viton available.
Maximum operating pressure 125psi (9 bar).
Hose barb sizes to fit 3/8", 1/2" & 3/4" hose.
Available in single, double & triple hose shanks.

PART# SINGLE	HOSE ID	PRICE
19349-211-406-NYB	3/8"	14.91 **V**
19349-211-540-NYB	1/2"	14.91 **V**
19349-211-785-NYB	3/4"	14.91 **V**

PART# DOUBLE	HOSE ID	PRICE
19350-212-406-NYB	3/8"	14.91 **V**
19350-212-540-NYB	1/2"	14.91 **V**
19350-212-785-NYB	3/4"	14.91 **V**

PART# TRIPLE	HOSE ID	PRICE
19351-213-406-NYB	3/8"	14.91 **V**
19351-213-540-NYB	1/2"	14.91 **V**
19351-213-785-NYB	3/4"	14.91 **V**

QJ300 SERIES
DIAPHRAGM CHECK VALVE
QUICK TEEJER NOZZLE ASSEMBLIES

Low profile design allows maximum protection against damage.
Available in single and double hose shanks.
Hose barb sizes to fit 3/8", 1/2" & 3/4" hose.
Drip-free shutoff. Opening pressure 10psi.
Standard diaphragm EPDM, Viton available.
Maximum operating pressure 300psi (20 bar).

PART# SINGLE	HOSE ID	PRICE
22251-311-375-NYB	3/8"	12.33 **V**
22251-311-500-NYB	1/2"	12.33 **V**
22251-311-750-NYB	3/4"	12.33 **V**

PART # DOUBLE	HOSE ID	PRICE
22252-312-375-NYB	3/8"	12.33 **V**
22252-312-500-NYB	1/2"	12.33 **V**
22252-312-750-NYB	3/4"	12.33 **V**

QJ39685 SERIES QUICK TEEJET NOZZLE BODIES

FEATURES:

- USE WITH QUICK TEEJET CAPS
- HOSE SHANKS AVAILABLE IN SINGLE (LEFT OR RIGHT) & DOUBLE FOR 1/2" HOSE ID.
- DRIP-FREE SHUTOFF.
- MAXIMUM OPERATING PRESSURE 300psi.

PART#	DESCRIPTION	PRICE
QJ39685-1L-500-NYB	SINGLE LEFT	10.11 **V**
QJ39685-1R-500-NYB	SINGLE RIGHT	10.11 **V**
QJ39685 2-500-NYB	DOUBLE	10.11 **V**

(866)775-8089
FAX (701)775-8217

QUICK TEEJET NOZZLE BODIES FOR WET BOOMS

QJ360 NOZZLE BODY SERIES

- AVAILABLE WITH EITHER 3, 4 OR 5 POSITIONS FOR EASY CHANGE OF SPRAY TIPS OR QUICK BOOM FLUSHING.
- MAXIMUM OPERATING PRESSURE OF 300PSI (20 BAR).
- POSITIVE SHUTOFF BETWEEN EACH SPRAY POSITION.
- AVAILABLE IN 1/2", 3/4" OR 1" PIPE CONNECTIONS.
- INCLUDES CHEMSAVER DIAPHRAGM CHECK VALVE FOR DRIP FREE SHUTOFF.
- STANDARD EPDM DIAPHRAGM WITH VITON AVAILABLE AS AN OPTION.

QJ363C

PART NUMBER	NUMBER OF OUTLETS	CLAMPS ON PIPE SIZE	PRICE
QJ363C-1/2-NYB	3	1/2"	23.30 **V**
QJ363C-3/4-NYB	3	3/4"	23.30 **V**
QJ363C-1-NYB	3	1"	23.30 **V**

QJ364C

PART NUMBER	NUMBER OF OUTLETS	CLAMPS ON PIPE SIZE	PRICE
QJ364C-1/2-NYB	4	1/2"	23.30 **V**
QJ364C-3/4-NYB	4	3/4"	23.30 **V**
QJ364C-1-NYB	4	1"	23.30 **V**

QJ365C

PART NUMBER	NUMBER OF OUTLETS	CLAMPS ON PIPE SIZE	PRICE
QJ365C-1/2-NYB	5	1/2"	23.30 **V**
QJ365C-3/4-NYB	5	3/4"	23.30 **V**
QJ365C-1-NYB	5	1"	23.30 **V**

RAPID STOP

* New feature for QJ360C & QJ17560A
* Evacuates air trapped in booms
* Reduces boom shut-off times
* Does NOT require boom redesign

PART#	DESCRIPTION	PRICE
CP98583-3-1-SS	QJ360C	12.97 **V**
CP98583-2-1-SS	QJ17560A	12.97 **V**

TYPE 24216 TRIPLE NOZZLE BODY

- PROVIDES 3 POSITIONS FOR EASY CHANGE OF SPRAY TIPS OR QUICK BOOM FLUSHING.
- MAXIMUM OPERATING PRESSURE OF 125PSI (9 BAR).
- POSITIVE SHUTOFF BETWEEN EACH SPRAY POSITION.
- AVAILABLE IN 1/2", 3/4" & 1" PIPE CONNECTIONS.
- INCLUDES CHEMSAVER DIAPHRAGM CHECK VALVE FOR DRIP-FREE SHUTOFF.
- CAN BE USED WITH ALL QUICK TEEJET CAPS.
- STANDARD EPDM DIAPHRAGM WITH VITON AVAILABLE AS AN OPTION.

24216

PART NUMBER	NUMBER OF OUTLETS	CLAMPS ON PIPE SIZE	PRICE
24216A-1/2-NYB	3	1/2"	31.18 **V**
24216A-3/4-NYB	3	3/4"	31.18 **V**
24216A-1-NYB	3	1"	31.18 **V**

QJ380 & QJ380F WET BOOM BODIES

QJ380 & QJ380F

Standard & Fertilizer (F) styles
Triple outlet turrets
3/4" and 1" wet boom sizes (wet only)
Max operating pressure 150psi (10 bar)
Applications:
High speed self-propelled machines
High flow rate liquid fertilizer applications

PART#	NUMBER OF OUTLETS	CLAMPS ON PIPE SIZE	PRICE
QJ383-3/4-NYB	3	3/4"	46.08 V
QJ383-1-NYB	3	1"	46.08 V

PART#	NUMBER OF OUTLETS	CLAMPS ON PIPE SIZE	PRICE
QJ383F-3/4-NYB	3/F	3/4"	50.30 V
QJ383F-1-NYB	3/F	1"	50.30 V

RAPID STOP

* New feature for QJ360C & QJ17560A
* Evacuates air trapped in booms
* Reduces boom shut-off times
* Improves start up times
* Does **NOT** require boom redesign
* Install 1 or 2 Rapid Stops per boom section

PART#	DESCRIPTION	PRICE
CP98583-3-1-SS	QJ360C	12.97 **V**
CP98583-2-1-SS	QJ17560A	12.97 **V**

RETROFIT SEAL

Retrofit gasket for large hole booms
- Replace JD factory supplied bodies
- Fits existing booms with 11/16" holes
Molded VITON material

PART# CP98488-VI $9.85 V

POLYPROPYLENE SCHEDULE 80 PIPE

POLYPROPYLENE PIPE		
PART#	DESCRIPTION	PRICE
075-8-00P	3/4" no spacing	5.08 **D**
075-8-20P	3/4" w/20" spacing, 3/8" holes	5.08 **D**
100-8-00P	1" no spacing	6.37 **D**
100-8-20P	1" w/20" spacing, 3/8" holes	6.37 **D**

(866)775-8089
FAX (701)775-8217

QUICK TEEJET NOZZLE BODIES & ACCESSORIES

TYPE QJ17560-NYB

PART NUMBER	CLAMPS TO PIPE SIZE	PRICE
QJ17560A-1/2-NYB	1/2”	6.55 **V**
QJ17560A-3/4-NYB	3/4”	6.55 **V**
QJ17560A-1-NYB	1”	6.55 **V**

- CAN BE MOUNTED TO 1/2”, 3/4” & 1” PIPE OR EQUIVALENT SIZE TUBING.
- 1/2” & 3/4” INCLUDE A MOUNTING HOLE IN CLAMP SUBASSEMBLY FOR MOUNTING TO FLAT SURFACE.
- ALLOWS SIDE MOUNTING TO FLAT SURFACE FOR PROTECTION OF NOZZLE BODY.
- FEATURES CHEMSAVER DRIP-FREE SHUTOFF.
- STANDARD EPDM DIAPHRAGM WITH OPTIONAL VITON AVAILABLE.
- MAXIMUM OPERATING PRESSURE OF 300psi (20 BAR).

TYPE QJ7421-NYB

PART NUMBER	CLAMPS TO PIPE SIZE	PRICE
QJ7421-1/2-NYB	1/2”	6.07 **V**
QJ7421-3/4-NYB	3/4”	6.07 **V**
QJ7421-1-NYB	1”	6.07 **V**

- CAN BE MOUNTED TO 1/2”, 3/4” & 1” PIPE OR EQUIVALENT SIZE TUBING.
- 1/2” & 3/4” INCLUDE A MOUNTING HOLE IN CLAMP SUBASSEMBLY FOR MOUNTING TO FLAT SURFACE.
- MAXIMUM OPERATING PRESSURE OF 300psi (20 BAR).

TYPE QJ22187-NYB

PART NUMBER	CLAMPS TO PIPE SIZE	PRICE
QJ22187-1/2-NYB	1/2”	15.24 **S**
QJ22187-3/4-NYB	3/4”	15.24 **S**
QJ22187-1-NYB	1”	15.24 **S**

QJ8360-NYB, 300psi

ALLOWS HOOK-UP TO 1/4” FPT

PART#	TO FIT	PRICE
QJ8360-NYB	1/4” NPT	7.53 **V**

QJ8355-NYB, 300psi

ALLOWS SIDE MOUNT

PART#	TO FIT	PRICE
QJ8355-1/4-NYB	1/4” NPT	15.11 **V**
QJ8355-1/8-NYB	1/8” NPT	15.11 **V**

QJT8360-NYB, 300psi

FITS TEEJET THREAD

PART#	TO FIT	PRICE
QJT8360-NYB	11/16” - 16 TJ	8.20 **V**

- CAN BE MOUNTED TO 1/2”, 3/4” & 1” PIPE OR EQUIVALENT SIZE TUBING.
- 1/2” & 3/4” INCLUDE A MOUNTING HOLE IN CLAMP SUBASSEMBLY FOR MOUNTING TO FLAT SURFACE.
- ALLOWS SIDE MOUNTING TO FLAT SURFACE FOR PROTECTION OF NOZZLE BODY.
- FEATURES CHEMSAVER DRIP-FREE SHUTOFF.
- STANDARD EPDM DIAPHRAGM WITH OPTIONAL VITON AVAILABLE.
- MAXIMUM OPERATING PRESSURE OF 300psi (20 BAR).

QUICK TEEJET
PUSH TO CONNECT FITTINGS

Features and Benefits:

* Available in both 1/4” and 3/8” tubing sizes
* For use with linear, low-density, polyethylene tubing
* Choice of body, cap, or body and cap combination
* Bodies feature proven Quick TeeJet diaphragm check valve available with a choice of opening pressures
* Allows flow shutoff to occur further downstream for improved fertilizer savings
* Orifice plate can be easily installed between body and cap for precise flow regulation
* Rugged nylon construction for reliability and excellent chemical resistance
* Compact, inline design for mounting in a variety of locations
* Integrated mounting lugs for easy installation using #10 or M5 screws or cable ties
* Flow rate of 2.5 GPM at 5 PSI pressure drop, 3.18 GPM at 10 PSI pressure drop
* Maximum pressure rating of 100 PSI

QUICK TEEJET PUSH TO CONNECT				
PART#	DESCRIPTION	OPENING PSI	HOSE OD	PRICE
QJ98595-1/4-2	PTC ASSEMBLY	2 PSI CHECK	1/4” OD HOSE	25.97 **V**
QJ98595-1/4-10	PTC ASSEMBLY	10 PSI CHECK	1/4” OD HOSE	25.97 **V**
QJ98594-3/8-2	PTC ASSEMBLY	2 PSI CHECK	3/8” OD HOSE	25.97 **V**
QJ98594-3/8-10	PTC ASSEMBLY	10 PSI CHECK	3/8” OD HOSE	25.97 **V**
QJ98592-1/4-2	PTC BODY	2 PSI CHECK	1/4” OD HOSE	17.55 **V**
QJ98592-1/4-10	PTC BODY	10 PSI CHECK	1/4” OD HOSE	17.55 **V**
QJ98590-3/8-2	PTC BODY	2 PSI CHECK	3/8” OD HOSE	17.55 **V**
QJ98590-3/8-10	PTC BODY	10 PSI CHECK	3/8” OD HOSE	17.55 **V**
QJ98588-1/4	PTC CAP	N/A	1/4” OD HOSE	8.47 **V**
QJ98586-3/8	PTC CAP	N/A	3/8” OD HOSE	8.47 **V**
QJ98598-90-1/4	90* CAP	N/A	1/4” OD HOSE	10.57 **V**
QJ98599-90-3/8	90* CAP	N/A	3/8” OD HOSE	10.57 **V**
CP18999-EPR	CAP GASKET	N/A	N/A	1.67 **V**

(866)775-8089
FAX (701)775-8217

QUICK TEEJET ADAPTERS & CLAMPS

CP21953

CP4620-FA

CHEMSAVER END CAP
X=2#, 8#, 10#, 20#, 30#

PART#	DESCRIPTION	PRICE
21950-X-NYB	END CAP	5.45 **V**
CP21953-EPR	DIA EPDM	0.73 **V**
CP21953-VI	DIA VITON	2.25 **V**
CP4620-FA	DIA FAIRPRENE	0.73 **V**
CP98488-VI	RETRO SEAL	9.85 **V**
4200-0004E	HYPRO DIA EPDM	0.95 **D**
4200-0004V	HYPRO DIA VITON	3.15 **D**

QJ111 & QJ111SQ

PART#	TO FIT	PRICE
QJ111-1/2	1/2”	4.01 **V**
QJ111-3/4	3/4”	4.01 **V**
QJ111-1	1”	4.01 **V**
QJ111-11/4	1-1/4”	4.01 **V**

PART#	TO FIT	PRICE
QJ111SQ-34	3/4”	4.01 **V**
QJ111SQ-1	1”	4.01 **V**
QJ111SQ-114	1-1/4”	4.01 **V**
QJ111SQ-112	1-1/2”	4.01 **V**

AA111 & AA111SQ

PART#	TO FIT	PRICE
AA111-1/2	1/2”	6.83 **V**
AA111-3/4	3/4”	6.83 **V**
AA111-1	1”	6.83 **V**
AA111-11/4	1-1/4”	11.41 **V**

PART#	TO FIT	PRICE
AA111SQ-1	1”	7.84 **V**
AA111SQ-11/4	1-1/4”	11.79 **V**
AA111SQ-11/2	1-1/2”	14.01 **V**

QJ1/4T-NYB

ALLOWS USE OF QUICK TEEJET SYSTEM WITH 1/4” MALE CONNECTIONS. MAXIMUM OPERATING PRESSURE OF 300psi.

PART#	TO FIT	PRICE
QJ1/4T-NYB	1/4” FPT	4.14 **V**

QJT-NYB

ALLOWS USE OF TEEJET SYSTEM WITH STANDARD 11/16” - 16 TEEJET THREAD. MAXIMUM OPERATING PRESSURE OF 300psi.

PART#	TO FIT	PRICE
QJT-NYB	11/16” - 16 TJ	7.67 **V**

QJ1/4TT-NYB

ALLOWS USE OF QUICK TEEJET SYSTEM WITH 1/4” FEMALE CONNECTIONS. MAXIMUM OPERATING PRESSURE OF 300psi.

PART#	TO FIT	PRICE
QJ1/4TT-NYB	1/4” MPT	4.14 **V**

22674-1/4-NYB

ALLOWS USE OF QUICK TEEJET SYSTEM WITH 1/4” FEMALE CONNECTIONS.

PART#	TO FIT	PRICE
22674-1/4-NYB	1/4” MPT	4.14 **V**

NOZZLE BODY ASSEMBLIES

NOZZLE THREAD TEE		
PART#	HB SIZE	PRICE
NTT38	3/8”	1.97 **D**
NTT12	1/2”	2.02 **D**
NTT58	5/8”	2.17 **D**
NTT34	3/4”	2.17 **D**

NOZZLE THREAD CROSS		
PART#	HB SIZE	PRICE
NTC38	3/8”	3.48 **D**
NTC12	1/2”	2.95 **D**
NTC34	3/4”	2.75 **D**

NOZZLE THREAD ELBOW		
PART#	HB SIZE	PRICE
NTL38	3/8”	1.95 **D**
NTL12	1/2”	1.95 **D**
NTL58	5/8”	1.95 **D**
NTL34	3/4”	2.16 **D**

NOZZLE THREAD BARB		
PART#	HB SIZE	PRICE
NTB38	3/8”	1.30 **D**
NTB12	1/2”	1.30 **D**

NOZZLE THREAD NUT		
PART#	MATERIAL	PRICE
NTN	NYLON	.47 **D**

NOZZLE CAP		
PART#	MATERIAL	PRICE
CP8027-NYB	NYLON	1.15 **D**

TEEJET SWIVEL BODY ASSEMBLIES

TEEJET SWIVEL NOZZLE BODY ASSEMBLIES ARE DESIGNED FOR USE IN ROW CROP SPRAYING TIPS. A LOCKNUT HOLDS THE SWIVEL BODIES FIRMLY IN POSITION FOR SELECTED SPRAY ANGLES, NOT AFFECTED BY JARRING OR VIBRATION. PART NUMBER INCLUDES BODY ONLY, NO TIPS, STRAINERS OR CAPS INCLUDED. AVAILABLE IN THREADED CAP AND QUICK TEEJET STYLES.

QJ8600-2

8600

8600-2

5000

5540

QJ8600

PART#	DESCRIPTION	PRICE
QJ8600-1/4-NYB	NYLON SINGLE SWIVEL W/QUICKJET	11.00 **V**
QJ8600-2-1/4-NYB	NYLON DOUBLE SWIVEL W/QUICKJET	13.24 **V**
8600-1/4T-NYB	NYLON SINGLE SWIVEL THREADED	12.76 **V**
8600-2-1/4T-NYB	NYLON DOUBLE SWIVEL THREADED	15.39 **V**
5000-1/4T	BRASS SINGLE SWIVEL FEMALE	26.57 **V**
5540-1/4TT	BRASS SINGLE SWIVEL MALE	29.36 **V**
4202-2-1/4T	BRASS DOUBLE SWIVEL	36.00 **V**

4202-2

(866)775-8089
FAX (701)775-8217

HOSE SHANKS & ACCESSORIES

TEE CONNECTION WITH 1/4" FPT		
PART#	BARB SIZE	PRICE
13435-406-NYB	3/8"	6.60 **V**
13438-540-NYB	1/2"	6.60 **V**

ELBOW CONNECTION WITH 1/4" FPT		
PART#	BARB SIZE	PRICE
13434-406-NYB	3/8"	6.60 **V**
13437-540-NYB	1/2"	6.60 **V**

3-WAY CONNECTION WITH 1/4" FPT		
PART#	BARB SIZE	PRICE
13436-406-NYB	3/8"	6.60 **V**
13439-540-NYB	1/2"	6.60 **V**

USE TEEJET HOSE SHANKS FOR ATTACHING HOSE TO NOZZLE BODY. FITS ALL TEEJET NOZZLE CAPS, REPLACING SPRAY TIPS.

TEEJET HOSE SHANKS		
PART#	HOSE ID	PRICE
8400-14	1/4"	1.00 **D**
8400-38	3/8"	1.00 **D**
8400-12	1/2"	1.00 **D**

TEEJET SPLIT EYELET NOZZLE BODIES MOUNT ON 1/2", 3/4" & 1" PIPE.
25775 MOUNTS TO 9.5mm HOLE.
7421 MOUNTS TO 7.2mm HOLE.

TEEJET SPLIT EYELET NOZZLE BODIES			
PART#	MATERIAL	PIPE SIZE	PRICE
25775-1/2T-NYB	NYLON	1/2"	8.24 **V**
25775-3/4T-NYB	NYLON	3/4"	8.24 **V**
25775-1T-NYB	NYLON	1"	8.24 **V**
7421-1/2TSS	STAINLESS	1/2"	18.92 **V**
7421-3/4TSS	STAINLESS	3/4"	18.92 **V**
7421-1TSS	STAINLESS	1"	18.92 **V**

CP3942 IS USED TO TEMPORARILY SHUT-OFF SELECTED NOZZLES BY REPLACING SPRAY TIPS WITH THESE PLUG TIPS. BRASS OR STAINLESS.

TIP PLUGS		
PART#	MATERIAL	PRICE
CP3942SS	STAINLESS	1.04 **V**
CP3942	BRASS	0.71 **V**

4676 TEEJET OUTLET ADAPTER
FITS THE OUTLETS OF TEEJET NOZZLE BODIES AS WELL AS THE OUTLETS OF VARIOUS GUN-JET SPRAY GUNS AND SHUT-OFF VALVES. USE FOR ATTACHING HOSE DROPS TO NOZZLES OR EXTENSIONS TO SPRAY GUNS.
11/16" -16 TJ NOZZLE THREAD X FNPT.

TEEJET OUTLET ADAPTER			
PART#	OUTLET SIZE	MATERIAL	PRICE
4676-14	1/4"	BRASS	4.24 **V**
4676-14-NYB	1/4"	NYLON	3.49 **V**
4676-14-SS	1/4"	STAINLESS	14.26 **V**

TEEJET HOSE DROPS
CONNECT TO STANDARD AND QUICK TEEJET NOZZLE BODIES AND CAN ALSO BE USED WITH SWIVELS. AVAILABLE IN 15" & 24" LENGTHS. MAXIMUM OPERATING PRESSURE 125psi. QJ1/4T-NYB CAN BE ATTACHED TO HOSE DROPS FOR USE WITH QUICK TEEJET CAPS

TEEJET HOSE DROPS				
PART#	LENGTH	INLET CONECTION	OUTLET CONNECTION	PRICE
21353-6-15-NYB	15"	QUICK TEEJET	1/4" MNPT	17.84 **V**
21353-6-24-NYB	24"	QUICK TEEJET	1/4" MNPT	17.84 **V**
21354-15-NYB	15"	11/16" -16 TJ THREAD	1/4" MNPT	11.80 **V**
21354-24-NYB	24"	11/16" -16 TJ THREAD	1/4" MNPT	13.14 **V**

TIP STRAINERS

8079

5053

STANDARD STRAINERS

STRAINERS PROTECT SPRAY TIP ORIFICES FROM CLOGGING AND DAMAGE.

TEEJET STANDARD TIP STRAINERS			
PART#	MESH	MATERIAL	PRICE
8079-PP-50	50	POLYPROPYLENE (RED) **NEW COLOR - GENTIAN BLUE	1.82 V
8079-PP-100	100	POLYPROPYLENE (GREEN) **NEW COLOR - TRAFFIC GREEN	1.82 V
5053-50-SS	50	BRASS	4.29 V
5053-100-SS	100	BRASS	4.29 V

4514

SLOTTED STRAINERS

SLOTTED ONE-PIECE STRAINERS FOR USE WITH LIQUID CONTAINING SUSPENDED SOLIDS.

TEEJET SLOTTED STRAINERS			
PART#	MESH	MATERIAL	PRICE
4514-NY-10	50	NYLON (RED) **NEW COLOR - GENTIAN BLUE	1.93 V
4514-NY-20	25	NYLON (YELLOW) **NEW COLOR - FLAME RED	1.93 V
4514-NY-32	16	NYLON (GRAY) **NEW COLOR - BROWN RED	1.93 V
4514-10	50	BRASS	2.04 V
4514-20	25	BRASS	2.04 V
4514-32	16	BRASS	2.04 V

4193

STRAINER AND CHECK VALVE

MINIMIZES NOZZLE DRIPPING; FITS ALL TEEJET NOZZLES. BALL CHECK OPENS AT 5 PSI. RECOMMENDED FOR FLOW RATES UP TO 8 GPM. NOT FOR USE WITH AI OR DG TIPS. **NOTE:** USE OF THESE BALL CHECK VALVES RESULTS IN A PRESSURE DROP OF 5 PSI TO 10 PSI DEPENDING ON SPRING RATING.

TEEJET STRAINERS & CHECK VALVE			
PART#	MESH	MATERIAL	PRICE
4193A-PP-50	50	PLYPROPYLENE (RED) **NEW COLOR - GENTIAN BLUE	5.96 V
4193A-PP-100	100	POLYPROPYLENE (GREEN) **NEW COLOR - TRAFFIC GREEN	5.96 V
4193A-SS-50	50	STAINLESS	29.45 V
4193A-SS-100	100	STAINLESS	29.45 V
4193A-BR-50	50	BRASS	7.50 V
4193A-BR-100	100	BRASS	7.50 V

SPRAY GUNS

22670-PP-1/4 TRIGGERJET

FEATURES:
22650 TRIGGERJET GUN
TRIGGER LOCK
22665 EXTENSION 15" OR 24"
8079-PP-50 STRAINER
5500-PPB-X8 ADJUSTABLE TIP
ACCEPTS ALL STANDARD SPRAY SYSTEMS
TIPS AND STAINERS

PART#	MATERIAL	INLET	MAX PRESSURE	LENGTH	MAX FLOW	PRICE
22670-PP-15-1/4	POLYPROPYLENE	1/4" FNPT	150	15"	1.4 GPM	65.88 **V**
22670-PP-24-1/4	POLYPROPYLENE	1/4" FNPT	150	24"	1.4 GPM	75.94 **V**

AA23L-7676 GUNJET

FEATURES:
AA23-7676 GUNJET
ALUMINUM ALLOY
EXTENSION 18" OR 24"
ACCEPTS ALL STANDARD SPRAY SYSTEMS
TIPS AND STRAINERS

PART#	MATERIAL	INLET	MAX PRESSURE	LENGTH	MAX FLOW	PRICE
AA23L-7676-18	ALUMINUM	1/4" MNPS	250	18"	5 GPM	163.20 **V**
AA23L-7676-24	ALUMINUM	1/4" NPS	250	24"	5 GPM	172.98 **V**

ADJUSTABLE CONEJET TIPS

PART#	MATERIAL	PRICE
5500-PPB-X5	POLY	13.30 **V**
5500-PPB-X6	POLY	13.30 **V**
5500-PPB-X8	POLY	13.30 **V**
5500-X3	BRASS	29.11 **V**
5500-X8	BRASS	29.11 **V**

5500-PPB
THE POLYPROPYLENE TIP HAS THE SAME PERFORMANCE CHARACTERISTICS AS THE BRASS TIP AND PROVIDES EXCELLENT CHEMICAL RESISTANCE. THIS TIP'S LIGHT WEIGHT MAKES IT WELL-SUITED FOR USE ON HANDHELD AND BACKPACK TYPE SPRAYERS.

5500
KNURLED BODY OF TIP ROTATES THROUGH A HALF TURN TO PROVIDE SPRAY SELECTION FROM WIDE ANGLE, FINELY ATOMIZED CONE SPRAY TO A STRAIGHT STREAM SPRAY.

HYPRO AG SPRAY GUN MODEL 3381-0043

3381-0043: Adjustable pattern spray gun with 7-1/4” barrel and 2.3mm nozzle, 3/8” and 1/2” hose barb.
3381-0043l: Adjustable pattern spray gun with 18” barrel and 2.3mm nozzle, 3/8” and 1/2” hose barb.

PART#	PORT	LENGTH	PRICE
3381-0043	3/8” & 1/2” HOSE BARB	7”	187.41 **R**
3381-0043L	3/8” & 1/2” HOSE BARB	18”	211.67 **R**

FIRE NOZZLES

Fully adjustable for solid stream to a fine mist. Polycarbonate construction with heavy rubber bumper.

PART#	SIZE	GPM	PRICE
FN34	3/4” FEMALE GARDEN HOSE THREAD	8	51.50 **A**
FN100	1” FEMALE PIPE	22	29.00 **A**
FN112	1-1/2” FEMALE PIPE	75	29.00 **A**
FN200	2” FEMALE PIPE	75	53.50 **A**

SPECIALTY NOZZLES

TEEJET EDUCTOR NOZZLE

ALLOWS SMALL PUMPS TO CIRCULATE LARGE VOLUMES OF LIQUID. MADE FROM GLASS-FILLED POLYPROPYLENE FOR EXCELLENT CORROSION & CHEMICAL RESISTANCE. LARGE FLOW OPENING MINIMIZES PLUGGING.

PART#	INLET	ORIFICE DIA	LENGTH	DIAMETER	PRICE
Y33180-PP	3/8" MPT	5/16"	4-1/16"	2-1/16"	75.50 **D**
Y9270-PP	3/4" MPT	3/8"	6-3/8"	2-29/32"	75.50 **D**

TEEJET TANK RINSING NOZZLES

FLUID DRIVEN ROTATIONAL SPRAY HEAD.
360 DEGREE COVERAGE INSIDE TANK.
MADE FROM CORROSION RESISTANT TEFLON MATERIAL.
MOUNTING CONNECTION 3/4" FEMALE NOT.

	CAPACITY GPM					
PART#	10 PSI	20 PSI	30 PSI	40 PSI	50 PSI	PRICE
27500E-3/4-18-TEF	9	12.7	15.6	18	20	367.10 **V**

THE ROTARY TANK RINSING NOZZLE IS USED FOR RINSING THE INSIDES OF CHEMICAL CONTAINERS AND SPRAY TANKS UP TO 6.5 FT IN DIAMETER. AVAILABLE WITH 1/2" NPT OR BSPT CONNECTIONS. SELF-CLEANING SLIDING BEARING. NOZZLE FITS IN 1-1/2" OPENING. BODY AND INSERTS ARE MADE OF POM (ACETAL).

	CAPACITY GPM					
PART#	20 PSI	30 PSI	40 PSI	50 PSI	60 PSI	PRICE
D41892-1/2-POM-6	4	4.9	5.7	6.4	7	272.62 **V**

TEEJET CONTAINER RINSING NOZZLES

USED TO RINSE CONTAINERS BEFORE DISPOSAL. CAN BE USED ON CONTAINERS WITH 1-1/32" OPENING OR LARGER. THREE FLAT ORIFICES PROVIDE SELF-ROTATION FORCES NEEDED. MADE OF 316 STAINLESS WITH HARDENED STAINLESS STEEL BEARING.

		CAPACITY GPM				
PART#	INLET	30 PSI	40 PSI	50 PSI	60 PSI	PRICE
23240-3-HSS-5.7-316SS	1/2" FNPT	4.3	5	5.6	6.1	977.93 **V**
23240-3-HSS-7-316SS	1/2" FNPT	6.1	7	7.8	8.6	1,017.19 **V**

USED TO RINSE CONTAINERS BEFORE DISPOSAL. 40 ORIFICES PRODUCE A 240 DEGREE SPRAY ANGLE ALL NYLON CONSTRUCTION. RECOMMENDED OPERATING PRESSURE 30-60 PSI.

		CAPACITY GPM				
PART#	INLET	30 PSI	40 PSI	60 PSI	80 PSI	PRICE
VSM-12-44	1/2" FNPT	7.5	8.6	10.6	12.2	49.75 **D**
VSM-12-90	1/2' FNPT	15.3	17.7	22	25	49.75 **D**
VSM-34-90	3/4" FNPT	15.3	17.7	22	25	510.32 **D**

COMBO-JET® Spray Tip-Caps

Wilger's patented all-in-one Tip-Cap & snap-in strainer.
See our selection of extended range and drift control spray tips and strainers.

COMBO-JET® Extended Range (ER) Tip-Cap-Smallest droplets, best coverage, greatest drift potential.
COMBO-JET® Small Reduction (SR) Tip-Cap & Orifice-Medium droplet drift reduction, excellent coverage lower drift potential.
COMBO-JET® Mid Range (MR) Tip-Cap & Orifice-Large sized droplets for very good coverage with significant reduction in drift.
COMBO-JET® Drift Control (DR) Tip-Cap & Orifice-Very Large droplets for good coverage with maximum drift control.

				GALLONS PER ACRE 20" SPACING							
				6	7	8	10	12	16	18	20
TIP #	PART#	PSI	GPM	MPH	MPH	MPH	MPH	MPH	MPH	MPH	MPH
ER80-01	40270-01	20	0.07	3.5	3.0	2.6	2.1	1.7	1.3	1.2	1.0
SR80-01	40288-01	30	0.09	4.5	3.8	3.3	2.7	2.2	1.7	1.5	1.3
MR80-01	40290-01	40	0.10	5.0	4.2	3.7	3.0	2.5	1.9	1.7	1.5
DR80-01	40280-01	50	0.11	5.4	4.7	4.1	3.3	2.7	2.0	1.8	1.6
ER110-01	40281-01	60	0.12	5.9	5.1	4.5	3.6	3.0	2.2	2.0	1.8
		70	0.13	6.4	5.5	4.8	3.9	3.2	2.4	2.1	1.9
		80	0.14	6.9	5.9	5.2	4.2	3.5	2.6	2.3	2.1
ER80-015	40270-015	20	0.11	5.4	4.7	4.1	3.3	2.7	2.0	1.8	1.6
SR80-015	40288-015	30	0.13	6.4	5.5	4.8	3.9	3.2	2.4	2.1	1.9
MR80-015	40290-015	40	0.15	7.4	6.4	5.6	4.5	3.7	2.8	2.5	2.2
DR80-015	40280-015	50	0.17	8.4	7.2	6.3	5.0	4.2	3.2	2.8	2.5
ER110-015	40281-015	60	0.18	8.9	7.6	6.7	5.3	4.5	3.3	3.0	2.7
SR110-015	40287-015	70	0.20	9.9	8.5	7.4	5.9	5.0	3.7	3.3	3.0
MR110-015	40291-015	80	0.21	10.4	8.9	7.8	6.2	5.2	3.9	3.5	3.1
DR110-015	40286-015										
ER80-02	40270-02	20	0.14	6.9	5.9	5.2	4.2	3.5	2.6	2.3	2.1
SR80-02	40288-02	30	0.17	8.4	7.2	6.3	5.0	4.2	3.2	2.8	2.5
MR80-02	40290-02	40	0.20	9.9	8.5	7.4	5.9	5.0	3.7	3.3	3.0
DR80-02	40280-02	50	0.22	10.9	9.3	8.2	6.5	5.4	4.1	3.6	3.3
ER110-02	40281-02	60	0.24	11.9	10.2	8.9	7.1	5.9	4.5	4.0	3.6
SR110-02	40287-02	70	0.26	12.9	11.0	9.7	7.7	6.4	4.8	4.3	3.9
MR110-02	40291-02	80	0.28	13.9	11.9	10.4	8.3	6.9	5.2	4.6	4.2
DR110-02	40286-02										
ER80-025	40270-025	20	0.18	8.9	7.6	6.7	5.3	4.5	3.3	3.0	2.7
SR80-025	40288-025	30	0.22	10.9	9.3	8.2	6.5	5.4	4.1	3.6	3.3
MR80-025	40290-025	40	0.25	12.4	10.6	9.3	7.4	6.2	4.6	4.1	3.7
DR80-025	40280-025	50	0.28	13.9	11.9	10.4	8.3	6.9	5.2	4.6	4.2
ER110-025	40281-025	60	0.31	15.3	13.2	11.5	9.2	7.7	5.8	5.1	4.6
SR110-025	40287-025	70	0.33	16.3	14.0	12.3	9.8	8.2	6.1	5.4	4.9
MR110-025	40291-025	80	0.35	17.3	14.9	13.0	10.4	8.7	6.5	5.8	5.2
DR110-025	40286-025										
ER-80-03	40270-03	20	0.21	10.4	8.9	7.8	6.2	5.2	3.9	3.5	3.1
SR80-03	40288-03	30	0.26	12.9	11.0	9.7	7.7	6.4	4.8	4.3	3.9
MR80-03	40290-03	40	0.30	14.9	12.7	11.1	8.9	7.4	5.6	5.0	4.5
DR80-03	40280-03	50	0.34	16.8	14.4	12.6	10.1	8.4	6.3	5.6	5.0
ER110-03	40281-03	60	0.37	18.3	15.7	13.7	11.0	9.2	6.9	6.1	5.5
SR110-03	40287-03	70	0.40	19.8	17.0	14.9	11.9	9.9	7.4	6.6	5.9
MR110-03	40291-03	80	0.42	20.8	17.8	15.6	12.5	10.4	7.8	6.9	6.2
DR110-03	40286-03										

(866)775-8089
FAX (701)775-8217

COMBO-JET® Spray Tip-Caps

PART#	STRAINERS	PRICE
40250-00	50 MESH BLUE	2.36 **D**
40251-00	100 MESH GREEN	2.36 **D**

DESCRIPTION	PRICE	DESCRIPTION	PRICE
ER Tips 01-08	11.47 **D**	ER Tips 10 & UP	11.47 **D**
SR Tips 01-06	16.96 **D**	SR Tips 08 & UP	16.96 **D**
MR Tips 01-05	16.96 **D**	MR Tips 06 & UP	16.96 **D**
DR Tips 01-04	16.96 **D**	DR Tips 05 & UP	16.96 **D**

				GALLONS PER ACRE 20" SPACING							
				6	7	8	10	12	16	18	20
TIP #	PART#	PSI	GPM	MPH	MPH	MPH	MPH	MPH	MPH	MPH	MPH
ER80-04	40270-04	20	0.28	13.9	11.9	10.4	8.3	6.9	5.2	4.6	4.2
SR80-04	40288-04	30	0.35	17.3	14.9	13	10.4	8.7	6.5	5.8	5.2
MR80-04	40290-04	40	0.40	19.8	17	14.9	11.9	9.9	7.4	6.6	5.9
DR80-04	40280-04	50	0.45	22	19	16.7	13.4	11.1	8.4	7.4	6.7
ER110-04	40281-04	60	0.49	24	21	18.2	14.6	12.1	9.1	8.1	7.3
SR110-04	40287-04	70	0.53	26	22	19.7	15.7	13.1	9.8	8.7	7.9
MR110-04	40291-04	80	0.57	28	24	21	16.9	14.1	10.6	9.4	8.5
DR110-004	40286-04										
ER80-05	40270-05	20	0.35	17.3	14.9	13	10.4	8.7	6.5	5.8	5.2
SR80-05	40288-05	30	0.43	21	18.2	16	12.8	10.6	8	7.1	6.4
MR80-05	40290-05	40	0.50	25	21	18.6	14.9	12.4	9.3	8.3	7.4
DR80-05	40280-05	50	0.56	28	24	21	16.6	13.9	10.4	9.2	8.3
ER110-05	40281-05	60	0.61	30	26	23	18.1	15.1	11.3	10.1	9.1
SR110-05	40287-05	70	0.66	33	28	25	19.6	16.3	12.3	10.9	9.8
MR110-05	40291-05	80	0.71	35	30	26	21	17.6	13.2	11.7	10.5
DR110-05	40286-05										
ER80-06	40270-06	20	0.42	21	17.8	15.6	12.5	10.4	7.8	6.9	6.2
SR80-06	40288-06	30	0.52	26	22	19.3	15.4	12.9	9.7	8.6	7.7
MR80-06	40290-06	40	0.60	30	25	22	17.8	14.9	11.1	9.9	8.9
DR80-06	40280-06	50	0.67	33	28	25	19.9	16.6	12.4	11.1	9.9
ER110-06	40281-06	60	0.73	36	31	27	22	18.1	13.6	12	10.8
SR110-06	40287-06	70	0.79	39	34	29	23	19.6	14.7	13	11.7
MR110-06	40291-06	80	0.85	42	36	32	25	21	15.8	14	12.6
DR110-06	40286-06										
ER80-08	40270-05	20	0.57	28	24	21	16.9	14.1	10.6	9.4	8.5
SR80-08	40288-08	30	0.69	34	29	26	20	17.1	12.8	11.4	10.2
MR80-08	40290-08	40	0.80	40	34	30	24	19.8	14.9	13.2	11.9
DR80-08	40280-08	50	0.89	44	38	33	26	22	16.5	14.7	13.2
ER110-08	40281-08	60	0.98	49	42	36	29	24	18.2	16.2	14.6
SR110-08	40287-08	70	1.06	52	45	39	31	26	19.7	17.5	15.7
MR110-08	40291-08	80	1.13	56	48	42	34	28	21	18.6	16.8
DR110-08	40286-08										
ER80-10	40270-10	20	0.71	35	30	26	21	18	13	12	11
SR80-10	40288-10	30	0.87	43	37	32	26	22	16	14	13
MR80-10	40290-10	40	1.00	50	42	37	30	25	19	17	15
DR80-10	40280-10	50	1.12	55	48	42	33	28	21	18	17
ER110-10	40281-10	60	1.22	60	52	45	36	30	23	20	18
SR110-10	40287-10	70	1.32	65	56	49	39	33	25	22	20
MR110-10	40291-10	80	1.41	70	60	52	42	35	26	23	21
DR110-10	40286-10										

COMBO-JET® & COMBO-RATE® NOZZLE BODIES

COMBO-JET®NOZZLE BODY -
Rugged and durable. Unique Radialock cap retainer makes it easier to put on and take off caps and caps are less likely to get knocked off. Available in single, double, and triple outlet wet boom, dry boom & KWIKSTOP models.

COMBO-JET WET BOOM NOZZLE BODY		
PART#	DESCRIPTION	PRICE
40611-00	SINGLE BODY 3/4" PIPE	6.23 **D**
40621-00	SINGLE BODY 1" PIPE	6.23 **D**
40612-00	DOUBLE BODY 3/4" PIPE	16.06 **D**
40622-00	DOUBLE BODY 1" PIPE	16.06 **D**
40613-00	TRIPLE BODY 3/4" PIPE	19.76 **D**
40623-00	TRIPLE BODY 1" PIPE	19.76 **D**
40155-07	DIAPHRAGM - FAIRPRENE	1.12 **D**

COMBO-JET DRY BOOM NOZZLE BODY		
PART#	DESCRIPTION	PRICE
40352-00	SINGLE	10.43 **D**
40353-00	DOUBLE	19.38 **D**
40354-00	TRIPLE	24.36 **D**

CAPSTAN BLENDED PULSE NOZZLE BODY		
PART#	DESCRIPTION	PRICE
41135-00	Thru-body Assy for Capstan (w/o nut)	4.81 **D**
41533-00	3-way Turret-body Assy for Capstan (w/o nut)	15.90 **D**
41534-00	4-way Turret-body Assy for Capstan (w/o nut)	15.90 **D**
41535-00	5-way Turret-body Assy for Capstan (w/o nut)	15.90 **D**

COMBO-RATE®NOZZLE BODY -
Lets you spray with more than one tip at same location to optimize coverage, drift control...and results.

COMBO-RATE DIAPHRAGM NOZZLE BODY		
PART#	DESCRIPTION	PRICE
41100-00	Thru-body Assy Diaphragm Check	10.63 **D**
41101-00	End-body Assy Diaphragm Check	9.70 **D**
41503-00	3-way Turret-body Assy Diaphragm Check	21.32 **D**
41504-00	4-way Turret-body Assy Diaphragm Check	21.32 **D**
41505-00	5-way Turret-body Assy Diaphragm Check	21.32 **D**

COMBO-RATE MANUAL ON/OFF DIAPH BODY		
PART#	DESCRIPTION	PRICE
41110-00	Thru-body Assy Manual On/Off	12.15 **D**
41111-00	End-body Assy Manual On/Off	11.29 **D**
41513-00	3-way Turret-body Assy Manual On/Off	22.84 **D**
41514-00	4-way Turret-body Assy Manual On/Off	22.84 **D**
41515-00	5-way Turret-body Assy Manual On/Off	22.84 **D**

COMBO-RATE WET BOOM SADDLES		
PART#	DESCRIPTION	PRICE
41203-00	Wet Boom Saddle Assy 3/4" Pipe, 3/8" Inlet	7.33 **D**
41200-00	Wet Boom Saddle Assy 1" Pipe, 3/8" Inlet	7.33 **D**
41201-00	Wet Boom Saddle Assy 1" Pipe, 9/16" Inlet	7.33 **D**
41206-00	Wet Boom Saddle Assy 2" Pipe, 9/16" Inlet	8.53 **D**

COMBO-RATE DRY BOOM COMPONENTS		
PART#	DESCRIPTION	PRICE
41256-00	Combo-Clip 3/4" Square Mount Adapter	4.20 **D**

(866)775-8089
FAX (701)775-8217

CONVENTIONAL
NOZZLE BODIES & PARTS

CONVENTIONAL/SQUARE-LUG SWIVEL NOZZLE BODIES -
are interchangeable with conventional/square-lug nozzle bodies and accommodate conventional/square-lug tip caps. Available in single, double and triple outlet wet boom, dry boom and KWIKSTOP models.

CONVENTIONAL WET BOOM NOZZLE BODY		
PART#	DESCRIPTION	PRICE
40651-00	SINGLE BODY FOR 3/4" PIPE	6.23 **D**
40661-00	SINGLE BODY FOR 1" PIPE	6.23 **D**
40652-00	DOUBLE BODY FOR 3/4" PIPE	16.06 **D**
40662-00	DOUBLE BODY FOR 1" PIPE	16.06 **D**
40653-00	TRIPLE BODY FOR 3/4" PIPE	19.76 **D**
40663-00	TRIPLE BODY FOR 1" PIPE	19.76 **D**
40155-07	DAIPHRAGM - FAIRPRENE	1.12 **D**

CONVENTIONAL DRY BOOM NOZZLE BODY		
PART#	DESCRIPTION	PRICE
40152-00	DOUBLE DRY BOOM BODY	19.38 **D**
40153-00	TRIPLE DRY BOOM BOODY	24.36 **D**

DRY BOOM HOSE SHANKS				
	PART#			PRICE
SINGLE	40301-00	40306-00	40311-00	2.30 **D**
DOUBLE	40302-00	40307-00	40312-00	2.30 **D**
TRIPLE	N/A	N/A	40313-00	3.10 **D**

COMBO-JET CONVERSION ADAPTER		
PART#	DESCRIPTION	PRICE
40204-00	Conventional to Combo-Jet	2.78 **D**
40202-00	Hardi to Combo-Jet	2.78 **D**
40203-00	Combo-Jet to Conventional	2.78 **D**

BOOM END FLUSH VALVE		
PART#	DESCRIPTION	PRICE
25175-VO	1" QN SST Style & 1-1/4"	29.13 **D**
25176-VO	1" NPTF Style	34.56 **D**
41402-VO	TWS (Case IH) Style	29.13 **D**
25173-03	Standard Handle	3.25 **D**
25175-13	Long Handle	3.25 **D**

RADIALOCK CAPS - SLOTTED, HOSEBARB, THREADED & SEAL ADAPTER		
For colors on caps add - 01 RED, 02 WHITE, 03 GREEN, 04 YELLOW, 05 BLACK		
PART #	DESCRIPTION	PRICE
40269-XX	Cap - Universal, Slot - 3/8" Wide	1.13 **D**
40271-XX	Cap - Universal, Round - 1/2" Diam	1.26 **D**
40275-XX	Cap - Hardi Slot	1.26 **D**
40276-XX	Cap - Wide Slot - 7/16" Wide	1.27 **D**
40279-XX	Cap - Universal, Slot, High Volume - 3/8" Wide	1.27 **D**
40272-05	Cap - Plug	1.26 **D**
40273-05	Cap - 1/4" NPTF	1.60 **D**
40274-05	Cap - 1/4" NPTF, 45 Degree	3.50 **D**
40277-05	Cap - 1/8" NPFT	1.50 **D**
40420-05	Cap - 1/8" Hose Barb	1.50 **D**
40422-05	Cap - 1/4" Hose Barb	1.50 **D**
40424-05	Cap - 3/8" Hose Barb	1.50 **D**
40426-05	Cap - 1/2" Hose Barb	1.50 **D**
40435-05	Cap - 1/4" Tube Push-In Fitting	4.67 **D**
40436-05	Cap - 3/8" Tube Push-In Fitting	4.79 **D**
40440-00	Twin Cap Adapter Assy w/Seal	5.57 **D**
40261-00	Seal Adapter	0.47 **D**

BANJO PUMPS

GAS-DRIVEN POLY TRANSFER PUMPS

PART#	PUMP SIZE	MOTOR	HP	GPM	PRICE
B200P6PRO	2”	BRIGGS	6.5	190	513.50 **A**
B200PH-5	2”	HONDA	5.5	190	870.28 **A**
200PH6	2”	HONDA	6.5		825.00 **A**
200PH6E	2”	HONDA	6.5		1,200.00 **A**
300PH-6	3”	HONDA	6.5	300	915.00 **A**
300PS6	3”	SIMPSON	6.7		775.00 **A**
B200PO	2”	PUMP ONLY		190	262.65 **A**
B300PO	3”	PUMP ONLY			371.89 **A**

NEW STYLE BREAKDOWN SHOWN
“V” SHAPED BODY PRIMES FASTER.

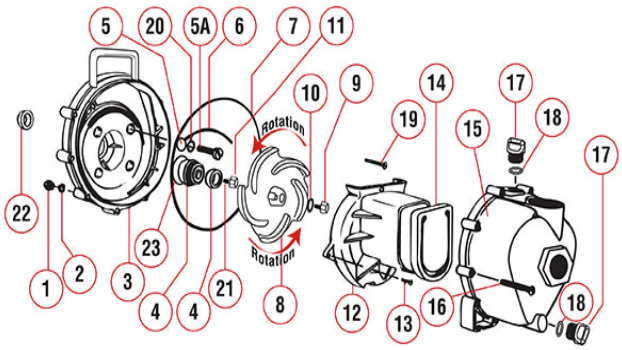

PUMP REPAIR KITS		
PART#	DESCRIPTION	PRICE
12000A	PUMP REPAIR KIT 2”	166.25 **D**
12999A	SEAL/O-RING KIT 2”	91.40 **D**
13999	SEAL/O-RING KIT 3”	91.40 **D**

Pump Cover

PART# PCVR $134.00 Y

PARTS NEW DESIGN MFG BEGINNING SEPT 1996					
REF #	DESCRIPTION	REQ	PART # 2”	PART # 3”	PRICE
1	BODY NUTS SS	10	V07019	V07019	1.33 **D**
2	LOCK WASHER SS	10	V07018	V07018	1.33 **D**
3	POLY PUMP REAR BRACKET	1	12703A	12703A	112.25 **D**
4	SEAL ASSEMBLY	1	12713	12713	54.95 **D**
5	SCREW HEADS O-RING	4	12717	12717	1.18 **D**
#	BRACKET SCREWS SS	4	12715A	12715A	4.75 **D**
6	O-RING SEGMENT	1	12754	12754	7.53 **D**
7	BODY O-RING	1	12719A	12719A	17.93 **D**
8	5 VANE IMPELLER	1	12772		52.65 **D**
	4 VANE IMPELLER			13771	74.05 **D**
9	IMPELLER BOLT SS	1	12765A	13765	22.58 **D**
10	IMPELLER BOLT GASKET	1	12774VA	12774VA	2.05 **D**
11	IMPELLER NUT	1	12775A	12775A	17.93 **D**
12	POLY PUMP VOLUTE	1	12702A		84.48 **D**
				13702	91.40 **D**
13	VOLUTE SCREWS SS	2	12725	12725	4.75 **D**
14	POLY PUMP CHECK VALVE	1	12705	12705	20.28 **D**
15	POLY PUMP BODY ASSY	1	12712A		173.55 **D**
				13712	231.38 **D**
16	BODY SCREWS SS	10	12720	12720	4.74 **D**
17	PRIME / DRAIN PLUG	2	12777		3.65 **D**
				13777	5.70 **D**
18	PLUG O-RING	2	UV15163		1.28 **D**
				13778	2.43 **D**
19	UPPER VOLUTE SCREW SS	1	12900	12900	1.98 **D**
20	REAR BRACKET WASHER SS	1	12901	12901	1.18 **D**
21	IMPELLER KEY	1	12902A	12902A	2.30 **D**
22	POLY PUMP SLINGER	1	12716	12716	7.53 **D**
23	O-RING SEAL ASSEMBLY	1	12710	12710	4.75 **D**

(866)775-8089
FAX (701)775-8217

BANJO PUMPS

M220 2” Manifold Poly Pumps

M220P6PRO

FEATURES:
* Precision molded construction
* Lightweight
* Corrosion resistant
* Superior design
* Low maintenance
* EPDM Standard, FKM (viton type) available

CAUTION-WARNING:
Please do not run pump dry, restrict or reduce port sizes, or dead head pump.

DO NOT USE WITH FLAMMABLE LIQUIDS.

M220PH5

PART #	DESCRIPTION	PRICE
M220PH6E	2” Manifold Poly Pump w/5.5 HP Honda Engine	1250.00 **A**
M220PH6	2” FP Manifold Super Pump w/6.5 HP Honda Engine	875.00 **P**
M220PO	2” Manifold Poly Pump ONLY w/3/4” Shaft & 4 Vane Impeller	305.63 **A**
** ELECTRIC START		

REPLACEMENT PARTS							
DESCRIPTION	REQ	PART#	PRICE	DESCRIPTION	REQ	PART#	PRICE
Mechanical Seal Assembly	1	12713	54.95 **D**	SS Body Hex Nut	10	V07019	1.33 **D**
5/16” Flat Washer	4	12901	1.18 **D**	7/16-14 Hex Nut	1	12775A	17.93 **D**
#11 O’ring	4	12717	1.18 **D**	3/16” Sq x 5/8” Key	1	12902A	2.30 **D**
2” FP Manifold Pump Body Assy	1	M12712	218.63 **D**	2” Poly Pump Volute	1	12702A	84.48 **D**
Check Valve	1	12705	20.28 **D**	5 Vane Impeller	1	12772	52.65 **D**
#10 x 1-1/2” PPH SMS	1	12900	1.98 **D**	Decal	1		
#6 x 1/2” PPH SMS	2	12725	4.75 **D**	#029 O’ring	1	12710	4.75 **D**
#375 O’ring	1	12719A	17.93 **D**	Pump Slinger	1	12716	7.53 **D**
O’ring Segment	1	12754	7.53 **D**	5/16-24 x 1-1/8” HFS	1	12765A	22.58 **D**
SS Body Screws	10	12720	4.75 **D**	Impeller Bolt Gasket	1	12774VA	2.05 **D**
SS Lockwasher	10	V07018	1.33 **D**	SS Bracket Screws	4	12715A	4.75 **D**
				Poly Pump Rear Bracket	1	12703A	112.25 **D**

NOTE: The M230 Super Pump Series has become the M220 Super Pump Series

2” POLY PUMP with ELECTRIC MOTORS

FEATURES
* Additional drive protection with added 1” spacer for ultimate protection
* Special non-metallic mechanical seal designed for better chemical resistance
* All elastomers are FKM (viton type)
* All internal fasteners are PTFE coated stainless steel
* The Banjo “Super Slinger” included for even more drive unit protection

Do not run pump dry.
DO NOT USE WITH FLAMMABLE LIQUIDS.

PART #	DESCRIPTION	PRICE
234PPE51V	2” Poly Pump w/5.0 HP Single Phase Electric Motor w/FKM (viton Type) Elastomers	2,060.67 **A**

2” & 3” POLY PUMP with HYDRAULIC MOTOR

PUMP FEATURES

*Precision molded construction
*Lightweight
*Corrosion resistant
*Superior design
*Low maintenance

HYDRAULIC MOTOR FEATURES

*Hydraulic fluid capacity
*Minimum 6 Gallon/Maximum 10 Gallon
*12 HP Motor
*Open or closed system
*3600 RPM

PART #	DESCRIPTION	PRICE
B200PHY	2” Poly Pump w/12 HP Hydraulic Motor	1,116.70 **A**
B300PHY	3” Poly Pump w/12 HP Hydraulic Motor	1,229.91 **A**

PART# HSV1000 $913.52 A

Recommendation:
We recommend using the motor spool control valve or a suitable equivalent. The lack of such a valve in the circuit may cause failure to the hydraulic motor.

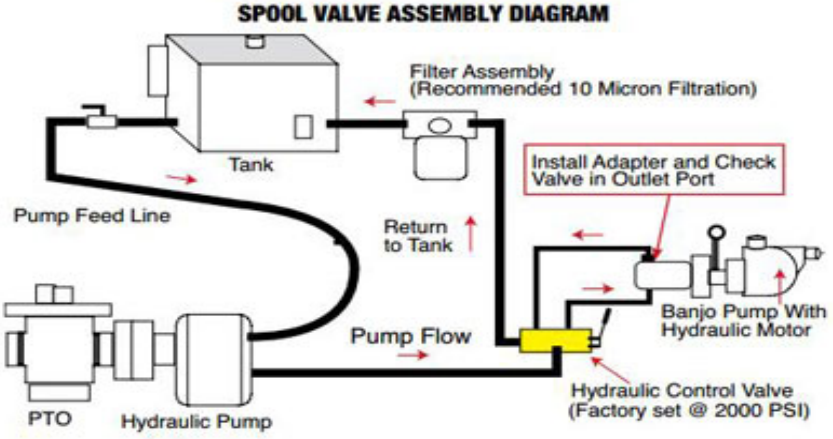

(866)775-8089
FAX (701)775-8217

CENTRIFUGAL PUMPS

GAS ENGINE DRIVEN			
PART#	ENGINE	PUMP	PRICE
32406H	6.5HP Honda	2” Cast, Wet Seal	$1,400.00 **Y**
335013H	13HP Electric Start Honda	3” Cast, Wet Seal	$2,550.00 **Y**
335013H-FLG	13HP Electric Start Honda	3” Cast, Wet Seal, Flanged	$2,550.00 **Y**

ELECTRIC DRIVEN			
PART#	ENGINE	PUMP	PRICE
S-3220-E5D3	Single Phase, 5HP	2” Cast, Wet Seal	$2,100.00 **Y**
S-3220-E5T3	3 Phase, 5HP	2” Cast, Wet Seal	$2,200.00 **Y**
SP-3340-E10TB-1	Single Phase, 10HP	3” Cast, Wet Seal	$3,950.00 **Y**
334010EW	3 Phase, 10HP	3” Cast, Wet Seal	$2,850.00 **Y**

PISTON PUMPS

PART#	DESCRIPTION	PRICE
NGP6055-FLG	Single Piston, 21 GPM, Flanged (220)	$1,700.00 **Y**
NGP7055-FLG	Single Piston, 34 GPM, Flanged (220)	$2,000.00 **Y**
DRV3300	Ground Drive w/Pump Mount	$1,975.00 **Y**

M332 Manifold Wet Seal Series Pumps

PART#	DESCRIPTION	PRICE
M332PIH13W	3” Manifold Cast Iron Wet Seal Pump w/13 HP Honda Engine	2,946.32 **A**
M332PIE10W	3” Manifold Cast Iron Wet Seal Pump w/10 HP Three Phase Electric Motor	2,946.32 **A**
M332PIE101W	3” Manifold Cast Iron Wet Seal Pump w/10 HP Single Phase Electric Motor	3,940.70 **A**

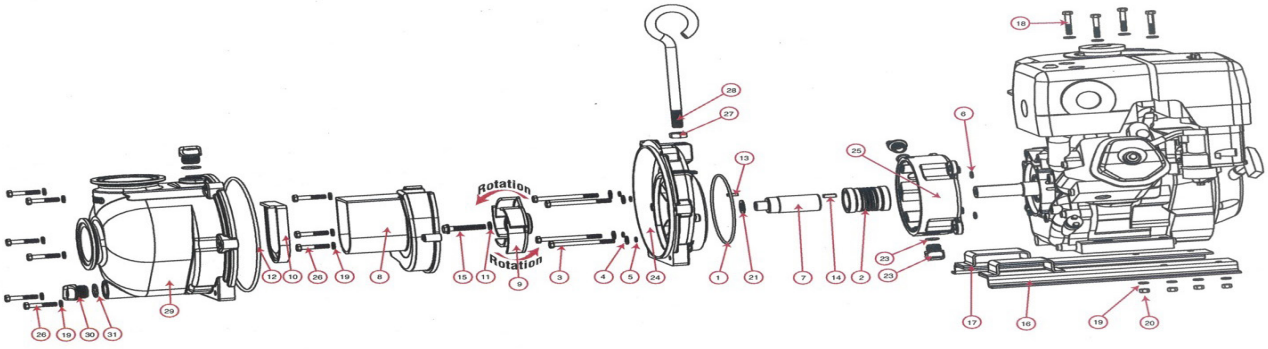

PARTS M332 WET SEAL CAST IRON					PARTS M332 WET SEAL CAST IRON				
REF #	DESCRIPTION	REQ	PART#	PRICE	REF #	DESCRIPTION	REQ	PART#	PRICE
1	O-Ring	1	13719	17.25 **D**	16	Z-Rail	1	18135B	**N/A**
2	Mechanical Seal Assembly	1	15035E	293.40 **D**	17	Z-Rail	1	18135A	**N/A**
3	5/16” - 24 x 3-3/4” HHCS	4	13034	10.98 **D**	18	5/16” - 18 x 1-3/4” HHCS	4	17029	**N/A**
4	5/16” Flat Washer	8	12901	1.18 **D**	19	5/16” Lock Washer	13	V10118	1.33 **D**
5	O-Ring for Bracket Screw	4	12717	1.18 **D**	20	5/16” Hex Nut	4	V10119	1.33 **D**
6	O-Ring	4	12709	1.18 **D**	21	Gasket	2	CV10175	1.98 **D**
7	Adapter Shaft	1	13055	138.85 **D**	22	Prime/Drain Plug	2	12777	3.65 **D**
8	Volute	1	19702	134.50 **D**	23	O-Ring	2	UV15163	1.28 **D**
9	5 Vane Impeller	1	19772	92.93 **D**	24	Rear Bracket	1	19703W	189.20 **D**
10	Check Valve	1	12705	20.28 **D**	25	Wet Seal Reservoir	1	19201W	145.28 **D**
11	Impeller Bolt Gasket	1	12774VA	2.05 **D**	26	5/16” - 24 x 1-3/4” HHCS	9	12715A	4.75 **D**
12	Body O-Ring	1	12719A	17.93 **D**	27	5/8” - 11 Jam Nut	1	18034	5.08 **D**
13	Impeller Key	1	12902A	2.30 **D**	28	Pump Handle	1	18033	26.45 **D**
14	1/4” sq x 3/4” Key Stock	1	16901	5.03 **D**	29	Pump Body	1	M19712X	312.58 **D**
15	3/8” - 24 x 2-1/4” HFS	1	13766	4.75 **D**	30	3/4” Drain Plug	2	13777	5.70 **D**
					31	O-Ring	2	13778	2.43 **D**

(866)775-8089
FAX (701)775-8217

HYPRO ROLLER PUMPS

1500 SERIES

1700 SERIES

4001 SERIES

4101 SERIES

6500 SERIES

7500 SERIES

FEATURES:
CAST IRON, NI-RESIST OR SILVER-CAST CONSTRUCTION.
POSITIVE DISPLACEMENT PUMPS FOR MOST
AGRICULTURAL CHEMICAL TRANSFER & SPRAYING

7700 SERIES

MODEL	MAX GPM	MAX PSI	MAX RPM	DESCRIPTION	PRICE
1502C	62	200	1000	CAST IRON, 6-ROLLER PUMP WITH SUPER ROLLERS, BUNA N SEALS, 1-1/2" NPT PORTS & 15/16" SOLID SHAFT	869.34 **A**
1502N	**62**	**200**	**1000**	**NI-RESIST, 6-ROLLER PUMP WITH SUPER ROLLERS, BUNA N SEALS, 1-1/2" NPT PORTS & 15/16" SOLID SHAFT**	**DISCONTINUED**
1502XL	62	200	1000	SILVERCAST, 6-ROLLER PUMP WITH SUPER ROLLERS, BUNA N SEALS, 1-1/2" NPT PORTS & 15/16" SOLID SHAFT	1,977.81 **A**
1700C	45	200	1000	CAST IRON, 5-ROLLER PUMP WITH SUPER ROLLERS, VITON SEALS, 1" NPT PORTS & 15/16" SOLID SHAFT	566.36 **A**
1700N	**45**	**200**	**1000**	**NI-RESIST, 5-ROLLER PUMP WITH SUPER ROLLERS, VITON SEALS, 1" NPT PORTS & 15/16" SOLID SHAFT**	**DISCONTINUED**
1700XL	45	200	1000	SILVERCAST 5-ROLLER PUMP WITH SUPER ROLLERS, VITON SEALS, 1" NPT PORTS & 15/16" SOLID SHAFT	1,578.68 **A**
4001C	9	150	1800	CAST IRON, 4-ROLLER PUMP WITH SUPER ROLLERS, VITON SEALS, 3/4" NPT PORTS & 5/8" SOLID SHAFT	265.38 **A**
4001N-EH	10.4	30	1900	12V MOTOR DRIVEN, NI-RESIST,4-ROLLER PUMP WITH SUPER ROLLERS, VITON SEALS, 3/4" PORTS & 1/2" HOLLOW SHAFT	1,012.05 **A**
4101C	7	150	2600	CAST IRON, 4-ROLLER PUMP WITH SUPER ROLLERS, VITON SEALS, 3/4" NPT PORTS & 5/8" SOLID SHAFT	252.90 **A**
4101N-EH	7.5	50	1900	12V MOTOR DRIVEN, NI-RESIST,4-ROLLER PUMP WITH SUPER ROLLERS, VITON SEALS, 3/4" PORTS & 1/2" HOLLOW SHAFT	997.80 **A**
6500C	22	300	1200	CAST IRON, 6-ROLLER PUMP WITH SUPER ROLLERS, VITON SEALS, 3/4" NPT PORTS & 5/8" SOLID SHAFT	273.87 **A**
6500N	22	300	1000	NI-RESIST, 6-ROLLER PUMP WITH SUPER ROLLERS, VITON SEALS, 3/4" NPT PORTS & 5/8" SOLID SHAFT	627.19 **A**
7560C	22	300	1000	CAST IRON, 8-ROLLER PUMP WITH SUPER ROLLERS, VITON SEALS, 3/4" NPT PORTS & 15/16" SOLID SHAFT	357.77 **A**
7560N	22	300	1000	NI-RESIST, 8-ROLLER PUMP WITH SUPER ROLLERS, VITON SEALS, 3/4" NPT PORTS & 15/16" SOLID SHAFT	711.54 **A**
7700C	22.4	200	800	CAST IRON, 7-ROLLER PUMP WITH SUPER ROLLERS, VITON SEALS, 3/4" NPT PORTS & 15/16" SOLID SHAFT	363.59 **A**
7700N	**22.4**	**200**	**800**	**NI-RESIST, 7-ROLLER PUMP WITH SUPER ROLLERS, VITON SEALS, 3/4" NPT PORTS & 15/16" SOLID SHAFT**	**DISCONTINUED**

HYPRO PTO ADAPTERS

HYPRO HEAVY DUTY PTO COUPLERS DESIGNED TO QUICKLY ATTACH ROLLER PUMPS SECURELY TO PTO SHAFTS.
MODELS FOR BOTH 540 & 1000 RPM PTO SHAFTS.

PTO (IN)	QUICK DISCONNECT RPM	SHAFT DIA (IN)	PART #	FITS PUMP	PRICE
1-3/8”	540	5/8”	1321-0006	6500	79.53 **A**
1-3/8”	540	15/16”	1321-0007	1502, 1700, 7560, 7700	86.11 **A**
1-3/8”	**1000**	**5/8”**	**1321-0008**	**6500**	DISCONTINUED 56.24 A
1-3/8”	1000	15/16”	1321-0009	1502, 1700, 7560	94.45 **A**
1-3/8”	MULTI	5/8”	1321-0012	6500	79.53 **A**
1-3/8”	MULTI	15/16”	1321-0013	1502, 1700, 7560, 7700	84.73 **A**
PTO (IN)	**STANDARD RPM**	**SHAFT DIA (IN)**	**PART #**	**FITS PUMP**	**PRICE**
1-3/8”	540	5/8”	1320-0022	6500	42.70 **A**
1-3/8”	540	15/16”	1320-0076	1500, 1700, 7560, 7700	78.49 **A**
1-3/8”	540	5/8”	1320-0077	6500	75.71 **A**
1-3/8”	1000	15/16”	1320-0078	1500, 1700, 7560	75.00 **A**
1-3/8”	1000	5/8”	1320-0079	4000, 6500	57.63 **A**
1-3/4”	1000	15/16”	1320-0080	1500, 1700, 7560	109.72 **A**
1-3/8”	540	1”	1320-0081	1200	113.89 **A**

*** DISCONTINUED - LIMITED QUANTITIES**

HYPRO ROLLER PUMP REPAIR PARTS

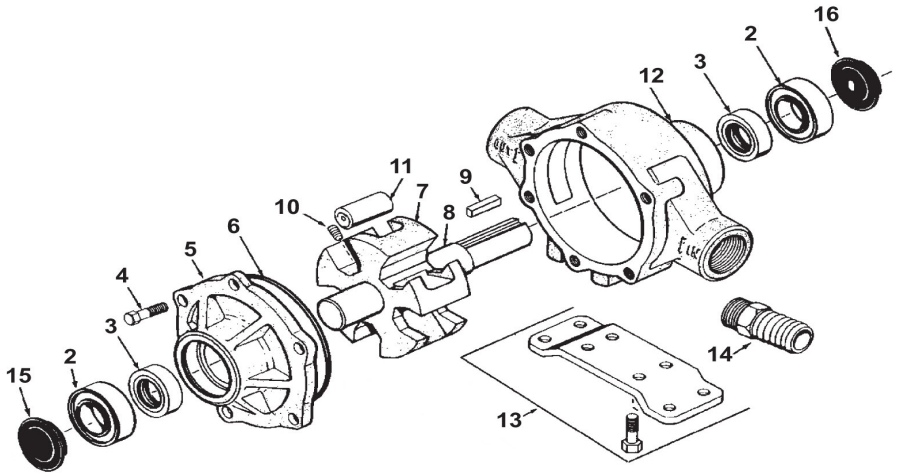

1500 SERIES

1700 SERIES

1500 SERIES				
Ref No.	Qty Req'd	Part Number	Description	Price
2	2	2008-0001	Sealed Balll Bearing	22.33 **A**
3	2	2112-0001	Buna-N Seal (Std)	22.50 **A**
3	2	2112-0003	Viton Seal	24.60 **A**
4	6	2210-0026	Bolt	1.49 **A**
5	**1**	***0200-1500C**	***Endplate (Cast Iron) w/Seal**	**N/A**
5	**1**	***0200-1500N**	***Endplate (Ni-Resist) w/Seal**	**N/A**
5	**1**	***0200-1500X**	***Endplate (SilverCast) w/Seal**	**N/A**
6	1	1720-0003	O-ring Gasket for Endplate	4.38 **A**
7	1	0300-1502C	Rotor (Cast Iron) w/Shaft (Std)	377.68 **A**
7	**1**	***0300-1502N**	***Rotor (Ni-Resist) w/Shaft (Std)**	**N/A**
7	**1**	***0300-1502X**	***Rotor (SilverCast) w/Shaft (Std)**	**N/A**
7A	1	0301-1502C	Rotor (Cast Iron) w/Shaft (Rev)	381.44 **A**
7A	**1**	***0301-1502N**	***Rotor (Ni-Resist) w/Shaft (Rev)**	**N/A**
7A	1	0301-1502X	Rotor (SilverCast) w/Shaft (Rev)	1,116.92 **A**
8	1	0500-1502	Shaft Only	93.75 **A**
9	1	1610-0005	Key	2.39 **A**
10	1	2230-0018	Set Screw	1.14 **A**
11	6	1005-0005	Super Roller (Std)	11.97 **A**
12	**1**	***0100-1500C**	***Body (Cast Iron) w/Seal**	**N/A**
12	**1**	***0100-1500N**	***Body (Ni-Resist) w/Seal**	**N/A**
12	**1**	***0100-1500X**	***Body (SilverCast) w/Seal**	**N/A**
13	1 kit	3420-0004	Base Kit Includes: (1) Base, (4) Bolts, (4) Lockwashers	127.64 **A**
15	1	2300-0020	Bearing Cover	2.19 **A**
16	1	2300-0022	Shaft Bearing Cover	2.19 **A**

1700 SERIES				
Ref No.	Qty Req'd	Part Number	Description	Price
2	2	2008-0001	Sealed Balll Bearing	22.33 **A**
3	2	2112-0001	Buna-N Seal (Std)	22.50 **A**
3	2	2112-0003	Viton Seal	24.60 **A**
4	6	2210-0005	Bolt	1.11 **A**
5	**1**	***0200-1700C**	***Endplate (Cast Iron) w/Seal**	**N/A**
5	**1**	***0200-1700N**	***Endplate (Ni-Resist) w/Seal**	**N/A**
5	**1**	***0200-1700X**	***Endplate (SilverCast) w/Seal**	**N/A**
6	1	1720-0099	O-ring Gasket for Endplate	3.01 **A**
7	1	0300-1700C	Rotor (SilverCast) w/Shaft (Std)	253.44 **A**
7	**1**	***0300-1700N**	***Rotor (Ni-Resist) w/Shaft (Std)**	**N/A**
7	**1**	***0300-1700X**	***Roto (SilverCast) w/Shaft (Std)**	**N/A A**
7A	1	0301-1700C	Rotor (SilverCast) w/Shaft (Rev)	243.52 **A**
7A	**1**	***0301-1700N**	***Rotor (Ni-Resist) w/Shaft (Rev)**	**N/A**
7A	1	0301-1700X	Rotor (SilverCast) w/Shaft (Rev)	834.78 **A**
8	1	0500-1502	Shaft Only	93.75 **A**
9	1	1610-0005	Key	2.39 **A**
10	1	2230-0018	Set Screw	1.14 **A**
11	5	1005-0005	Super Roller (Std)	11.97 **A**
12	**1**	***0100-1700C**	***Body (Cast Iron) w/Seal**	**N/A**
12	**1**	***0100-1700N**	***Body (Ni-Resist) w/Seal**	**N/A**
12	**1**	***0100-1700X**	***Body (SilverCast) w/Seal**	**N/A**
13	1 kit	3420-0004	Base Kit Includes: (1) Base, (4) Bolts, Lockwashers	127.64 **A**
14	1	BHB114	1-1/4" Hose Barb	2.88 **D**
15	1	2300-0020	Bearing Cover	2.19 **A**
16	1	2300-0022	Shaft Bearing Cover	2.19 **A**

*** DISCONTINUED - LIMITED QUANTITIES**

HYPRO ROLLER PUMP REPAIR PARTS

4000 SERIES

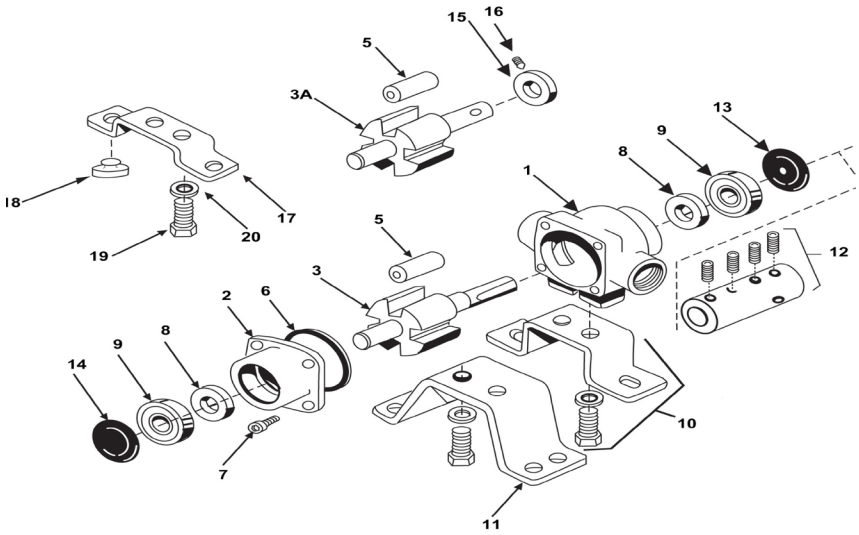

REPAIR PARTS KIT:
CONSISTS OF::
(4) REF 5 SUPER ROLLERS
(1) REF 6 O-RING GASKET
(2) REF 8 VITON SEALS
PART# 3430-0390 $54.16 A

4001				
Ref #	**Qnty**	**Part #**	**Description**	**Price**
1	**1**	***0100-4001C**	***Body (Cast Iron) w/Std Seal**	**N/A**
1	**1**	***0100-4001N**	***Body (Ni-Resist) w/Std Seal**	**N/A**
2	**1**	***0200-4001C**	***Endplate (Cast Iron) w/Std Seal**	**N/A**
2	**1**	***0200-4001N**	***Endplate (Ni-Resist) w/Std Seal**	**N/A**
3	**1**	***0300-4001C**	***Rotor (Cast Iron)/Shaft Assmbly**	**N/A**
3	1	3430-0765	Rotor (Ni-Resist)/Shaft/Key	129.22 **A**
3A	1	3430-0780	Kit Hollow Shaft	127.96 **A**
5	4	1005-0002	Super Rollers (Std)	5.72 **A**
6	1	1720-0104	O-ring Gasket for Endplate	1.42 **A**
7	4	2220-0018	Endplate Screw	1.14 **A**
8	2	2107-0002	Viton Seal (Std)	15.52 **A**
9	2	2000-0010	Ball Bearing	13.48 **A**
10	1	3420-0024	Base Kit (3-1/2" shaft centerline)	62.50 **A**
11	**1**	***3420-0025**	***Base Kit** (4-3/16" shaft centerline)	**N/A**
12	1 kit	1320-0016	Adapter w/screws (5/8" x 5/8")	58.33 **A**
12	1 kit	1320-0015	Adapter (5/8" x 3/4")	59.71 **A**
13	1	2300-0023	Shaft Bearing Cover	2.29 **A**
14	1	2300-0021	Bearing Cover	2.19 **A**
15	1	1420-0001	Locking Collar	8.88 **A**
16	1	2230-0001	Set Screw	2.83 **A**
17	1	1510-0054	Base	20.60 **A**
18	2	1450-0003	Bumper	2.04 **A**
19	2	2210-0003	Bolt	1.45 **A**
20	2	2260-0002	Lock Washer	1.42 **A**

4101				
Ref #	**Qnty**	**Part #**	**Description**	**Price**
1	**1**	***0100-4101C**	***Body (Cast Iron) w/Std Seal**	**N/A**
1	**1**	***0100-4101N**	***Body (Ni-Resist) w/Std Seal**	**N/A**
2	**1**	***0200-4101C**	***Endplate (Cast Iron) w/Std Seal**	**N/A**
2	**1**	***0200-4101N**	***Endplate (Ni-Resist) w/Std Seal**	**N/A**
3	**1**	***0300-4101C**	***Rotor (Cast Iron)/Shaft Assmbly**	**N/A**
3	1	3430-0766	Rotor (Ni-Resist)/Shaft/Key	168.26 **A**
3A	1	3430-0781	Kit Hollow Shaft	161.52 **A**
5	4	1005-0002	Super Rollers (Std)	5.72 **A**
6	1	1720-0104	O-ring Gasket for Endplate	1.42 **A**
7	4	2220-0018	Endplate Screw	1.32 **A**
8	2	2107-0002	Viton Seal (Std)	15.52 **A**
9	2	2000-0010	Ball Bearing	13.48 **A**
10	1	3420-0024	Base Kit (3-1/2" shaft centerline)	62.50 **A**
11	**1**	***3420-0025**	***Base Kit** (4-3/16" shaft centerline)	**N/A**
12	1 kit	1320-0016	Adapter w/screws (5/8" x 5/8")	58.33 **A**
12	1 kit	1320-0015	Adapter (5/8" x 3/4")	59.71 **A**
13	1	2300-0023	Shaft Bearing Cover	2.29 **A**
14	1	2300-0021	Bearing Cover	2.19 **A**
15	1	1420-0001	Locking Collar	8.88 **A**
16	1	2230-0001	Set Screw	2.83 **A**
17	1	1510-0054	Base	20.60 **A**
18	2	1450-0003	Bumper	2.04 **A**
19	2	2210-0003	Bolt	1.45 **A**
20	2	2260-0002	Lock Washer	1.42 **A**

*** DISCONTINUED - LIMITED QUANTITIES**

HYPRO ROLLER PUMP REPAIR PARTS

6500 SERIES

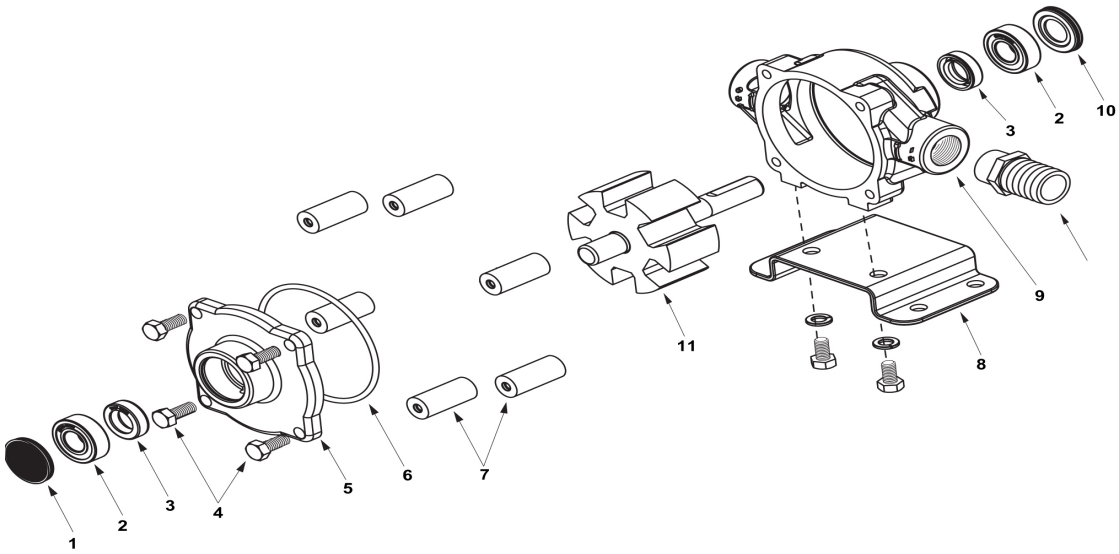

REPAIR PARTS KIT
CONSISTS OF:
(6) REF 7 SUPER ROLLER
(1) REF 6 O-RING
(2) REF 3 VITON SEALS
PART# 3430-0380 $63.90 A

Ref #	Req'd	Part #	Description	Price
1	1	2300-0021	Bearing Cover	2.19 **A**
2	2	2000-0010	Sealed Ball Bearing	13.48 **A**
3	2	2107-0002	Viton Seal (Std)	15.52 **A**
4	4	2210-0004	Bolts	1.32 **A**
5	1	0200-6600C	Endplate (Cast Iron) w/Seal	88.57 **A**
5	**1**	***0200-6600N**	***Endplate (Ni-Resist) w/Seal**	**N/A**
6	1	1720-0008	O-ring Gasket for Endplate	2.23 **A**
7	6	1005-0004	Super Roller (Std)	5.47 **A**
8	1 kit	3420-0023	Base Kit: (1) Base, (2) Bolts, (2) Washers	53.13 **A**
9	**1**	***0100-6600C**	***Body (Cast Iron) w/Seal**	**N/A**
9	1	0100-6600N	Body (Ni-Resist) w/Seal	497.28 **A**
	1	BHB100	1" Hose Barb	1.98 **D**
10	1	2300-0023	Shaft Bearing Cover	2.29 **A**
11	**1**	***0300-6600C**	***Rotor Assembly (Cast Iron)**	**N/A**
11	1	3430-0767	Rotor Assembly (Ni-Resist)	277.24 **A**

*** DISCONTINUED - LIMITED QUANTITIES**

HYPRO ROLLER PUMP REPAIR PARTS

7560 SERIES

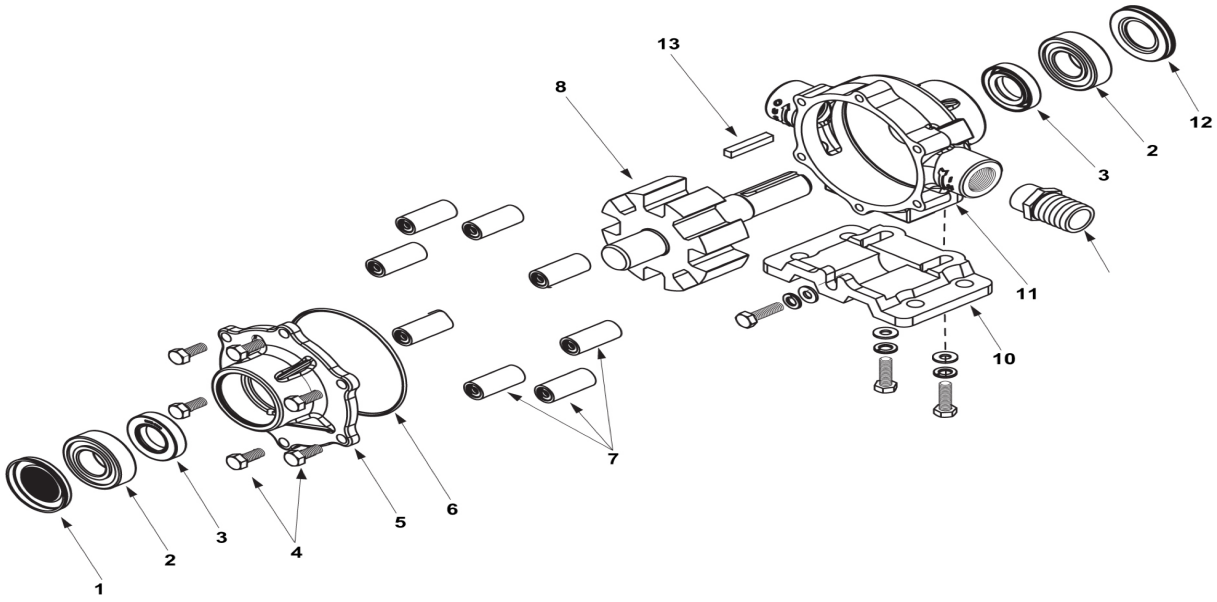

REPAIR PARTS KIT
CONSISTS OF:
(8) REF 7 SUPER ROLLERS
(1) REF 6 O-RING
(2) REF 3 VITON SEALS
PART# 3430-0381 $91.33 A

REPAIR PARTS KIT
CONSISTS OF:
(8) REF 7 POLYPROPYLENE ROLLERS
(1) REF 6 O-RING
(2) REF 3 VITON SEALS
PART# 3430-0167 $86.11 A

Ref #	Req'd	Part #	Description	Price
1	1	2300-0020	Bearing Cover	2.19 **A**
2	2	2008-0001	Sealed Ball Bearing	22.33 **A**
3	2	2112-0003	Viton Seal (Std)	24.60 **A**
4	6	2210-0004	Bolt	1.32 **A**
5	1	0204-7500C	Endplate (Cast Iron) with Seal	113.06 **A**
5	**1**	***0204-7500N**	***Endplate (Ni-Resist) with Seal**	**N/A**
6	1	1720-0014	O-ring Gasket for Endplate	3.30 **A**
7	8	1005-0004	Super Roller (Std)	5.47 **A**
8	1	3430-0745	Roto Assembly (Std, N & XL)	312.26 **A**
10	1 kit	3420-0003	Base Kit-Includes: (1) Base, (3) Bolts, (3) Washers	83.34 **A**
11	**1**	***0104-7500C**	***Body (Cast Iron) with Seal**	**N/A**
11	**1**	***0104-7500N**	***Body (NiResist) with Seal**	**N/A**
12	1	2300-0022	Shaft Bearing Cover	2.19 **A**
13	1	1610-0005	Key	2.39 **A**
13	1	1610-0059	Key (Stainless Steel)	6.65 **A**

*** DISCONTINUED - LIMITED QUANTITIES**

HYPRO ROLLER PUMP REPAIR PARTS

HYPRO

7700 SERIES

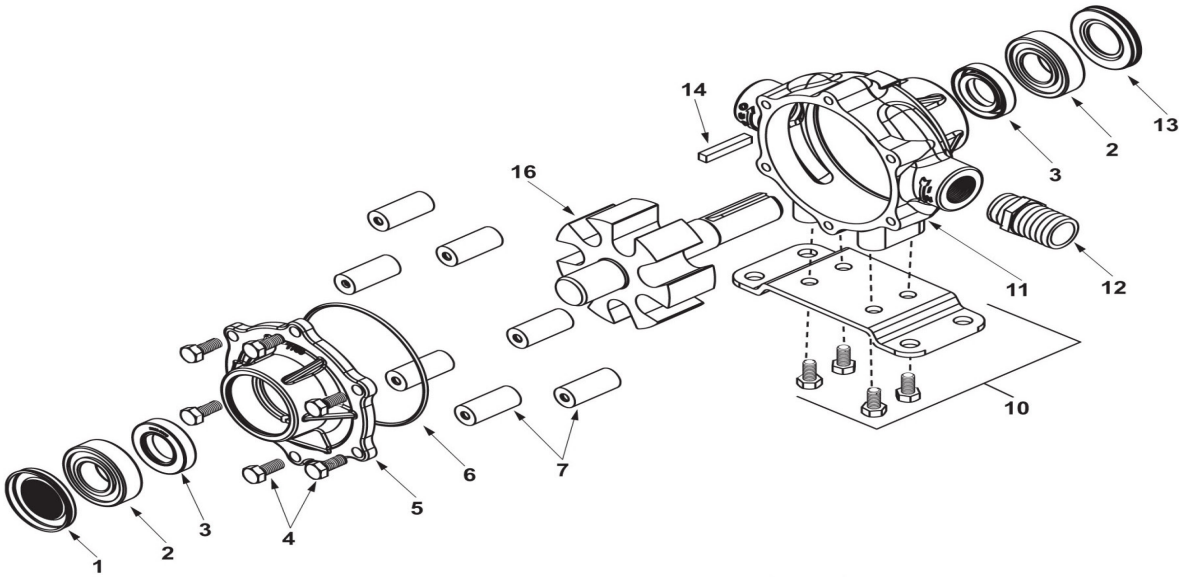

REPAIR PARTS KIT
CONSISTS OF:
(8) REF 7 SUPER ROLLERS
(1) REF 6 O-RING
(2) REF 3 VITON SEALS
PART# 3430-0384 $85.76 A

REPAIR PARTS KIT
CONSISTS OF:
(8) REF 7 POLYPROPYLENE ROLLERS
(1) REF 6 O-RING
(2) REF 3 VITON SEALS
PART# 3430-0167 $86.11 A

Ref #	Req'd	Part #	Description	Price
1	1	2300-0020	Bearing Cover	2.19 **A**
2	2	2008-0001	Sealed Ball Bearing	22.33 **A**
3	2	2112-0003	Viton Seal (std)	24.60 **A**
4	6	2210-0004	Bolts	1.32 **A**
5	1	0200-7700C	Endplate (Cast Iron) with Seal	**N/A**
5	1	0200-7700N	Endplate (Ni-Resist) with Seal	**N/A**
6	1	1720-0014	O-ring Gasket for Endplate	3.30 **A**
7	7	1005-0004	Super Roller (Std)	5.47 **A**
10	1	3420-0010	Base Kit Includes: (1) Base, (4) Bolts	84.05 **A**
11	**1**	***0100-7700C**	***Body (Cast Iron) with Seal**	**N/A**
11	**1**	***0100-7700N**	***Body (Ni-Resist) with Seal**	**N/A**
12	1	BHB100	Shaft Bearing Cover	1.98 **D**
13	1	2300-0022	Shaft Bearing Cover	2.19 **A**
14	1	1610-0005	Key	2.39 **A**
16	**1**	***0300-7700C**	***Rotor Assembly (Cast Iron)**	**N/A**
16	**1**	***0300-7700N**	***Rotor Assembly (Ni-Resist)**	**N/A**

*** DISCONTINUED - LIMITED QUANTITIES**

HYPRO SERIES 9200 PEDESTAL PUMPS

HYPRO PEDESTAL PUMPS OFFER INSTALLATION VERSATILITY. THE PEDESTAL MOUNTING BASE CAN BE USED FOR DIRECT DRIVE OR BELT AND PULLEY DRIVE WITH GAS OR ELECTRIC MOTORS ALSO AVAILABLE WITH ELECTRIC CLUTCH

9202C

9203C

HYPRO CAST IRON PEDESTAL PUMP OUTLET CAN BE ROTATED TO FOUR DIFFERENT POSITIONS. CAST IRON MODELS ARE EPOXY COATED WITH SOLID STAINLESS STEEL SHAFTS, FACTORY LUBRICATED BEARINGS AND NYLON IMPELLERS.

HYPRO POLYPROPYLENE PEDESTAL PUMPS ARE MANUFACTURED FROM GLASS-FILLED POLYPROPYLENE WITH SOLID STAINLESS STEEL SHAFTS AND VITON SEALS STANDARD.

PART NUMBER	MAX GPM	MAX PSI	MAX RPM	CAST IRON & POLY PEDESTAL PUMP DESCRIPTION	PRICE
9202C	105	170	6000	Pedestal mount, cast iron pump with 5/8” solid shaft and Viton shaft seal. 1-1/4” inlet, 1” outlet NPT ports.	643.18 **A**
9203C	140	170	6000	Pedestal mount, cast iron pump with 5/8” solid shaft and Viton shaft seal. 1-1/2” inlet, 1-1/4” outlet NPT ports.	651.12 **A**
9203C-R	140	170	6000	Pedestal mount, clockwise rotation cast iron pump with 5/8” solid shaft and Viton shaft seal. 1-1/2” inlet, 1-1/4” outlet NPT ports.	666.97 **A**
9205C	180	190	4200	Pedestal mount, cast iron pump with 7/8” solid keyed shaft and Viton shaft seal. 2” inlet, 1-1/2” outlet NPT ports.	1,632.86 **A**
9203P-S	100	80	4200	Pedestal mount, poly pump designed for direct drive or belt & pully with an electric or gas motor, 7/8” solid keyed stainless shaft. 1-1/2”x1-1/4”	807.37 **A**
				CAST IRON & POLY PEDESTAL PUMP WITH CLUTCH	
9262-C-C	88	124	5000	12v HD clutch with 5” diameter, counterclockwise rotation cast iron pump with A-section pully. 1-1/4” inlet, 1” outlet NPT ports.	1,221.82 **A**
9263-C-C	140	124	5000	12v HD clutch with 5” diameter, counterclockwise rotation cast iron pump with A-section pully. 1-1/2” inlet, 1-1/4” outlet NPT ports.	1,227.49 **A**
9263C-CR	140	124	5000	12v HD clutch with 5” diameter, clockwise rotation cast iron pump with A-section pully. 1-1/2” inlet, 1-1/4” outlet NPT ports.	1,241.07 **A**
				REPLACEMENT CLUTCHES	
2526-0011			5000	FITS: 9203P, 9253P-C, 9500P-S, 9205C, 9205C-SP	1,360.33 **P**

CAST AND POLY MODELS

HYPRO SERIES 9300 HYDRAULIC DRIVE PUMPS

9303C

9303P

9306C

PART NUMBER	MAX GPM	MAX PSI	HYDRAULIC DRIVE CAST IRON & POLY PUMPS DESCRIPTION	PRICE
9303C-HM1C	114	130	13 gpm hydraulic motor/**CAST IRON** pump for open/closed system NPT threaded ports, 1-1/2" inlet, 1-1/4" outlet	1,443.74 **A**
9303C-HM2C	97	95	6 gpm hydraulic motor/**CAST IRON** pump for open/closed system NPT threaded ports, 1-1/2" inlet, 1-1/4" outlet	1,4443.74 **A**
9303C-HM3C	125	98	24 gpm hydraulic motor/**CAST IRON** pump for open/closed system NPT threaded ports, 1-1/2" inlet, 1-1/4" outlet	1,535.48 **A**
9303C-HM4C	115	93	7 gpm hydraulic motor/**CAST IRON** pump for open/closed system NPT threaded ports, 1-1/2" inlet, 1-1/4" outlet	1,443.74 **A**
9303C-HM5C	147	145	16 gpm hydraulic motor/**CAST IRON** pump for open/closed system NPT threaded ports, 1-1/2" inlet, 1-1/4" outlet	1,443.74 **A**
9303C-HM1C-U	114	130	13 gpm hydraulic motor/**CAST IRON** pump for open/closed system NPT threaded ports, 1-1/2" inlet, 1-1/4" outlet w/220 x 200 flanges	1,506.03 **A**
9303C-HM4C-U	115	93	7 gpm hydraulic motor/**CAST IRON** pump for open/closed system NPT threaded ports, 1-1/2" inlet, 1-1/4" outlet w/220 x 200 flanges	1,506.03 **A**
9303P-HM1C	110	130	13 gpm hydraulic motor/**POLY** pump for open/closed system NPT threaded ports, 1-1/2" inlet, 1-1/4" outlet	1,508.31 **A**
9303P-HM2C	82	95	6 gpm hydraulic motor/**POLY** pump for open/closed system NPT threaded ports, 1-1/2" inlet, 1-1/4" outlet	1,508.31 **A**
9303P-HM4C	82	84	7 gpm hydraulic motor/**POLY** pump for open/closed system NPT threaded ports, 1-1/2" inlet, 1-1/4" outlet	1,508.31 **A**
9303P-HM5C	113	120	16 gpm hydraulic motor/**POLY** pump for open/closed system NPT threaded ports, 1-1/2" inlet, 1-1/4" outlet	1,508.31 **A**
9306C-HM1C	207	127	13 gpm hydraulic motor/**CAST IRON** pump for open/closed system NPT threaded ports, 2" inlet, 1-1/2" outlet	1,674.76 **A**
9306C-HM5C	212	140	17 gpm hydraulic motor/**CAST IRON** pump for open/closed system NPT threaded ports, 2" inlet, 1-1/2" outlet	1,674.76 **A**
9306C-HM5C-BU	212	140	17 gpm hydraulic motor/**CAST IRON** pump for open/closed system NPT threaded ports, 2" inlet, 1-1/2" outlet **(silicon carbide seal)**	1,878.59 **A**
9306C-HM1C-U	207	127	13 gpm hydraulic motor/**CAST IRON** pump for open/closed system ports 220 x 220 flange	1,735.91 **A**

HYPRO DIAPHRAGM PUMPS

HYPRO LOW PRESSURE DIAPHRAGM PUMPS ARE AN EXCELLENT CHOICE FOR A POSITIVE DISPLACEMENT PUMP. AVAILABLE IN A WIDE RANGE FOR GROUND RIGS WHEN SPRAYING HERBICIDES, PESTICIDES AND LIQUID FERTILIZERS. PUMPS LISTED ARE LOW PRESSURE PUMPS. MEDIUM AND HIGH PRESSURE PUMPS ARE ALSO AVAILABLE CALL FOR PRICING.

9910-D115 LOW PRESSURE PUMP

PART NUMBER	MAX GPM	MAX PSI	MAX RPM	HYPRO LOW-PRESSURE DIAPHRAGM PUMPS DESCRIPTION	PRICE
9910-D70	19	290	550	2-DIAPHRAGM PUMP 1-1/4" HB INLET, 3/4" HB OUTLET. SELECT SHAFT KIT FOR DESIRED DRIVE.	1,325.00 **A**
9910-D115	30.1	290	550	3-DIAPHRAGM PUMP 1-1/2" HB INLET, 1" HB OUTLET. SELECT SHAFT KIT FOR DESIRED DRIVE.	1,985.00 **A**
9910-D135	34.8	290	550	3-DIAPHRAGM PUMP 1-1/2" HB INLET, 1" HB OUTLET. 1-3/8" X 6 SPLINE MALE SHAFT	1,881.28 **A**
9910-D160	42.5	290	550	4-DIAPHRAGM PUMP 2" HB INLET, 1-1/2" HB OUTLET. 1-3/8" X 6 SPLINE MALE SHAFT	3,280.00 **A**
9910-D250	66	290	550	6-DIAPHRAGM PUMP 2" HB INLET, 1-1/2" HB OUTLET. 1-3/8" X 6 SPLINE MALE SHAFT	4,305.00 **A**

6 SPLINE AND SOLID SHAFT KITS

1-3/8" 6 SPLINE FEMALE PTO SHAFT KIT		
KIT NUMBER	FITS PUMP MODEL	PRICE
9910-KIT1708	9910-D70 & 9910-D115	350.00 **A**
KIT INCLUDES FEMALE PTO COUPLER AND RETAINING CLAMP, TORQUE ARM & MTG BRACKET, CHAINS AND NECESSARY HARDWARE		

1-3/8" 6 SPLINE MALE PTO SHAFT KIT		
KIT NUMBER	FITS PUMP MODEL	PRICE
9910-KIT1710	9910-D70 & 9910-D115	392.51 **A**
KIT INCLUDES MALE PTO SHAFT ADAPTER, MTG BRACKET, AND NECESSARY HARDWARE		

1" MALE SOLID SHAFT KIT		
KIT NUMBER	FITS PUMP MODEL	PRICE
9910-KIT1711	9910-D70 & 9910-D115	325.00 **A**
KIT INCLUDES MALE PTO SHAFT ADAPTER, MTG BRACKET, AND NECESSARY HARDWARE		

HYPRO CAST IRON PEDESTAL PUMP REPAIR PARTS

9202C, 9203C, 9252C, 9253C
9203C-R & 9253C-R

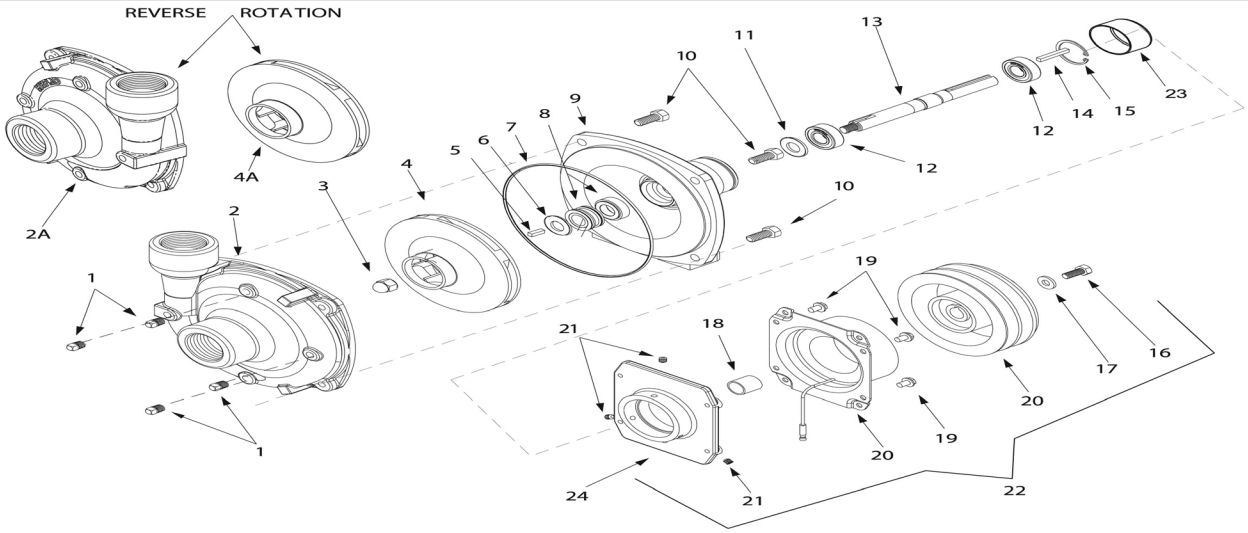

Ref	Qnty	Part #	Description	Price
1	4	PL18	Drain Plug Poly	0.66 **D**
2	1	0150-9000C	Pump Casting	312.55 **A**
2A	1	0152-9000C	Pump Casting REVERSE	293.84 **A**
3	1	2253-0002	Impeller Nut	8.09 **A**
4	1	0402-9100P	Impeller	77.44 **A**
4A	1	0404-9100P	Impeller (Nyglass) **REVERSE**	104.65 **A**
5	1	1610-0015	Key	2.58 **A**
6	1	1700-0100	Gasket	6.87 **A**
7	1	1720-0083	O-Ring	4.97 **A**
8	1	2120-0008	Mechanical Seal	42.70 **A**
9	**1**	***0750-9200C3**	**Mounting Flange**	**234.28 A**
10	4	2210.0020	Bolt	1.32 **A**
11	1	1410-0056	Slinger Ring	1.84 **A**
12	2	2000-0010	Ball Bearing	13.48 **A**
13	1	3430-0844	Pump Shaft	194.45 **A**
14	1	1600-0004	Key	**N/A**
15	1	1820-0013	Bearing Retainer	1.75 **A**
16	1	2210-0003	Bolt	1.45 **A**
17	1	2270-0092	Retaining Washer	11.58 **A**
18	1	1410-0107	Spacer	28.37 **A**
20	1	2526-0012	Clutch, 5” Dia W	956.54 **A**
21	3	2230-0001	Set Screw	2.83 **A**
22	1	3430-0592	Clutch Kit	1,107.80 **A**
25	1	1810-0036	Retaining Ring	7.48 **A**

*** DISCONTINUED - LIMITED QUANTITIES**

HYPRO CAST IRON PEDESTAL PUMP REPAIR PARTS

9205C

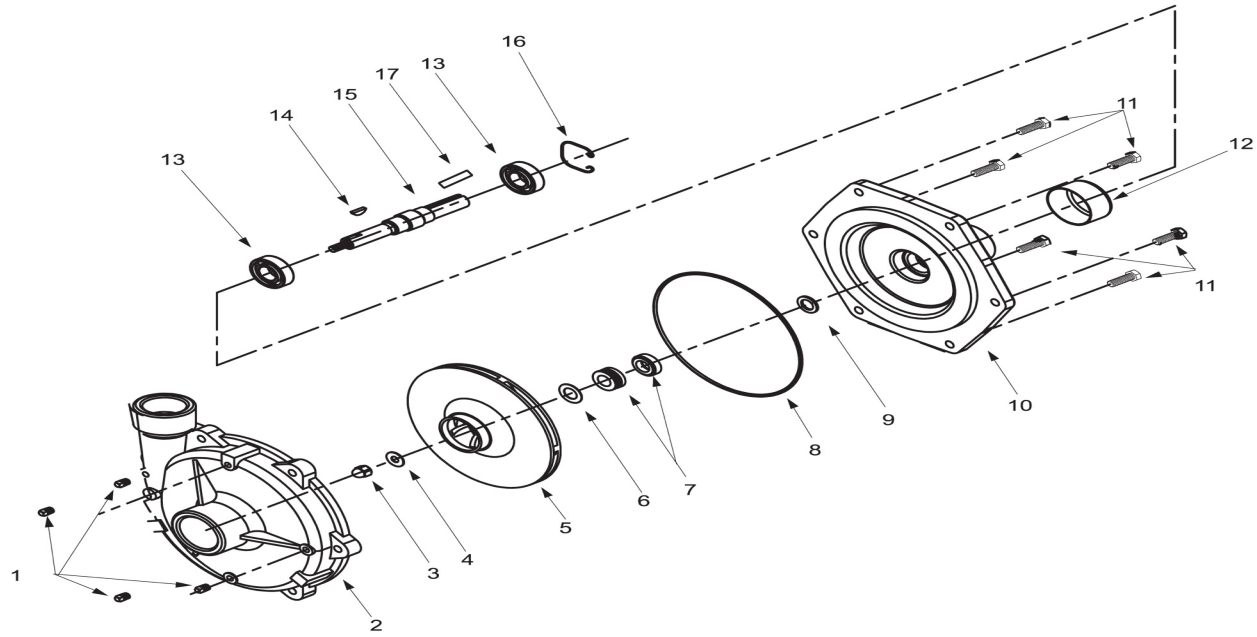

Ref	Qnty	Part #	Description	Price
1	4	PL18	Drain Plug Poly	0.66 **D**
1	4	PL18S	Drain Plug Steel	3.26 **D**
2	1	0152-9200C	Pump Casing	650.06 **A**
3	1	2253-0002	Impeller Nut	8.09 **A**
4	1	2270-0071	Washer	1.75 **A**
5	1	0403-9200P	Impeller (Nylon)	443.10 **A**
6	1	1700-0101	Gasket	8.19 **A**
7	1	3430-0537	Mechanical Seal	76.22 **A**
8	1	1720-0180	O-ring	6.81 **A**
9	1	1410-0083	Slinger Ring	2.81 **A**
10	**1**	***0751-9200C**	***Mounting Flange**	**568.23 A**
11	6	2210-0086	Bolt	1.80 **A**
12	**1**	***2300-0035**	***Protective Cover**	DISCONTINUED
13	2	2008-0001	Bearing	22.33 **A**
14	**1**	***1610-0012**	***Key**	**1.78 A**
15	1	3430-0846	Shaft Kit	426.98 **A**
16	1	1820-0025	Bearing Retainer	5.61 **A**

*** DISCONTINUED - LIMITED QUANTITIES**

(866)775-8089
FAX (701)775-8217

HYPRO POLY PEDESTAL PUMP REPAIR PARTS

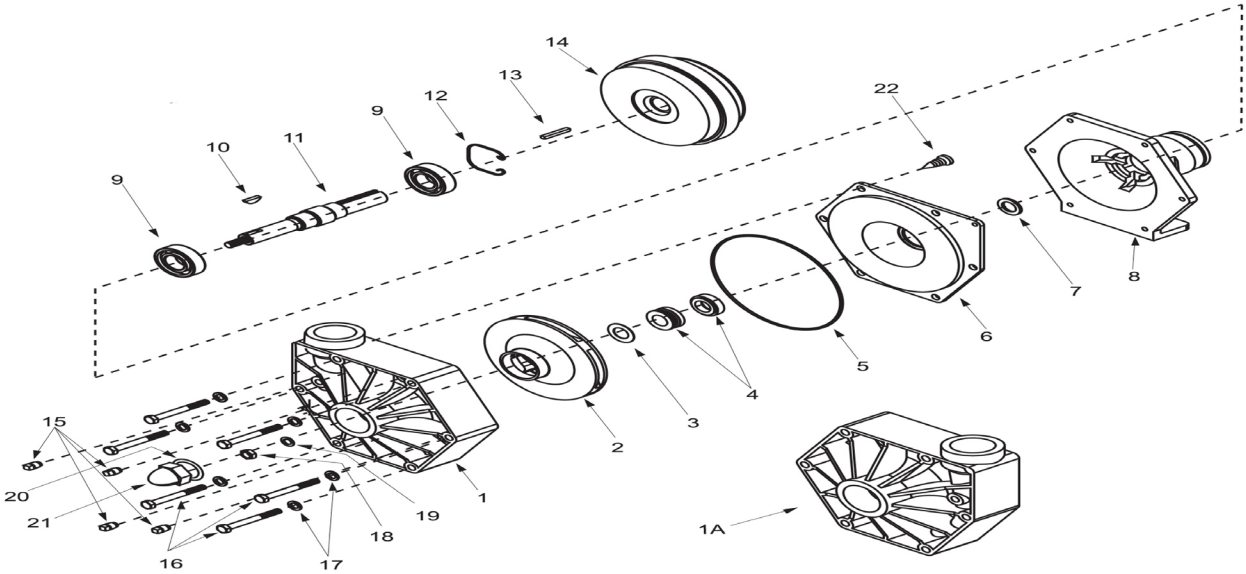

9203P-S 9500P-S

Ref	Qnty	Part #	Description	Price
1	**1**	***0700-9000P**	***Pump Casing (9203P-S, 9253P-C)**	**65.82 A**
1A	1	0701-9500P	Pump Casing (9500P-S, 9553P-C)	72.57 **A**
2	1	0403-9000P	Impeller (Poly) 9203P-S, 9253P-C	86.46 **A**
2A	1	0402-9000P	Impeller (Poly) 9500P-S, 9553P-C	110.42 **A**
3	1	1700-0101	Gasket	8.19 **A**
4	1	3430-0333	Mechanical Seal	106.25 **A**
5	1	1721-0083	O-ring	23.72 **A**
6	1	0750-9000P	Back Cover (9203P-S, 9253P-C)	30.96 **A**
6A	1	0700-9500P	Back Cover (9500P-C, 9553P-C)	30.20 **A**
7	1	1410-0083	Slinger Ring	2.81 **A**
8	1	0702-9200C	Flange	359.76 **A**
9	2	2008-0001	Bearing	22.33 **A**
11	1	3430-0846	Shaft (316 Stainless Steel) Revd	426.98 **A**
12	1	1820-0025	Retaining Ring	5.61 **A**
13	1	1610-0004	Key	2.50 **A**
14	1	2526-0011	Clutch	1,360.33 **A**
15	4	2406-0016	Plug	12.13 **A**
16	6	2210-0087	Hex Head Bolt	1.75 **A**
17	6	2270-0041	Washer	1.53 **A**
18	1	2250-0051	Jam Nut	2.97 **A**
19	1	2270-0057	Washer	3.22 **A**
20	1	1700-0097	Gasket	10.84 **A**
21	1	2250-0052	Impeller Nut	2.31 **A**
22	1	2210-0088	Screw	1.53 **A**

*** DISCONTINUED - LIMITED QUANTITIES**

HYPRO HYDRAULIC PUMP REPAIR PARTS CAST IRON

9303C-HM1C
9303C-HM2C
9303C-HM3C
9303C-HM4C
9303C-HM5C

HYDRAULIC MOTOR PART #'S		
PART#	MOTOR	PRICE
2500-0081C	HM1	1,240.40 **P**
2500-0082C	HM2	1,240.40 **P**
2500-0083C	HM3	1,452.38 **P**
2500-0084C	HM4	1,240.40 **P**
2500-0085C	HM5	1,240.40 **P**

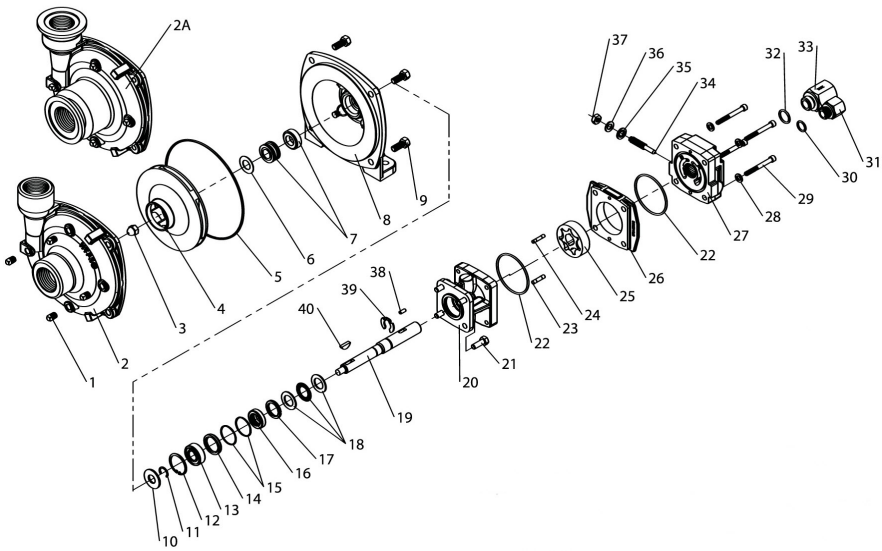

Ref	Qnty	Part #	Description	Price
1	4	PL18	Drain/Vent Plug Poly	0.66 **D**
2	**1**	**0150-9000C**	***Pump Casing**	**312.55 A**
2A	1	0153-9000C	Pump Casing (Universal Flange Model C-U)	345.86 **A**
3	1	3430-0825	Impeller Nut	40.81 **A**
4	1	0402-9100P	Impeller	77.44 **A**
5	1	1720-0083	O-ring	4.97 **A**
6	1	1700-0100	Rubber Gasket	6.87 **A**
8	1	0750-9300C	Mounting Flange	183.88 **A**
9	4	2210-0020	Hex Head Cap Screw	1.32 **A**
10	1	1410-0056	Slinger Ring	1.84 **A**
11	1	1810-0014	Snap Ring	1.53 **A**
12	1	1820-0013	Retainer Ring	1.75 **A**
13	1	2000-0010	Ball Bearing	13.48 **A**
14	1	1410-0131	Cartridge, Front	16.82 **A**
15	2	1720-0268	O-ring	1.96 **A**
16	1	3430-0748	Lip Seal	127.43 **A**
17	1	1410-0130	Seal Spacer	9.19 **A**
18	1	2029-0014	Thrust Bearing Assembly	43.76 **A**
19	1	3430-0850	Shaft (HM2C & HM4C)	344.46 **A**
19	1	3430-0852	Shaft (HM1C & HM5C)	250.01 **A**
19	1	3430-0855	Shaft (HM3C)	443.62 **A**
20	1	0150-2500C	Motor Body (Includes Needle Bearing)	189.83 **A**
21	4	2210-0005	Hex Head Cap Screw	1.11 **A**
22	2	1720-0110	O-ring	1.75 **A**
23	1	1600-0045	Dowel Pin (HM2C/HM4C)	20.64 **A**
23	1	1600-0044	Dowel Pin (HM1C/HM5C)	25.99 **A**
23	1	1600-0052	Dowel Pin (HM3C)	37.07 **A**
24	1	1600-0042	Dowel Pin (HM2C/HM4C)	20.64 **A**
24	1	1600-0037	Dowel Pin (HM1C/HM5C)	25.99 **A**
24	1	1600-0068	Dowel Pin (HM3C)	16.79 **A**

Ref	Qnty	Part #	Description	Price
25	1	3900-0022	Gerotor (HM1C)	269.48 **A**
25	1	3900-0023	Gerotor (HM2C)	244.48 **A**
25	1	3900-0024	Gerotor (HM3C)	341.70 **A**
25	1	3900-0025	Gerotor (HM4C)	265.29 **A**
25	1	3900-0048	Gerotor (HM5C)	273.65 **A**
26	1	0701-2500C1	Gerotor Housing (HM2C) 1/4" Wide	254.20 **A**
26	1	0700-2500C1	Gerotor Housing (HM1C) 1/2" Wide	173.64 **A**
26	1	0703-2500C1	Gerotor Housing (HM4C) 5/16" Wide	166.69 **A**
26	1	0702-2500C1	Gerotor Housing (HM3C) 1" Wide	268.07 **A**
26	1	0704-2500C1	Gerotor Housing (HM5C) 5/8" Wide	212.53 **A**
27	1	0254-2500C2	Motor Endplate (Includes Needle Bearing)	201.01 **A**
28	4	2270-0039	Washer	1.47 **A**
29	4	2220-0045	Cap Screw (HM2C & HM4C)	2.08 **A**
29	4	2220-0021	Cap Screw (HM1C)	2.62 **A**
29	4	2220-0044	Cap Screw (HM3C)	4.52 **A**
29	4	2220-0032	Cap Screw (HM5C)	6.11 **A**
30	1	1720-0108	O-ring	1.53 **A**
31	1	3360-0021A	Pressure Port Adapter (includes o-ring)	32.10 **A**
33	1	3320-0051A	Tank Port Adapter (includes o-ring)	60.43 **A**
34	1	3220-0029	Bypass Adjusting Screw	12.47 **A**
35	1	1700-0047	Gasket	5.99 **A**
36	1	2270-0027	Washer	2.58 **A**
37	1	2250-0038	Lock Nut	1.47 **A**
38	1	1610-0032	Roll Pin (HM2C & HM4C)	11.17 **A**
38	1	1610-0031	Roll Pin (HM1C & HM5C)	6.32 **A**
38	1	1610-0055	Roll Pin (HM3C)	38.13 **A**
39	1	1810-0026	Snap Ring	1.53 **A**
40	**1**	**1610-0012**	***Woodruff Key (9303C)**	**1.78 A**

*** DISCONTINUED - LIMITED QUANTITIES**

Spray Advantage
(866)775-8089
FAX (701)775-8217

HYPRO HYDRAULIC PUMP REPAIR PARTS POLY

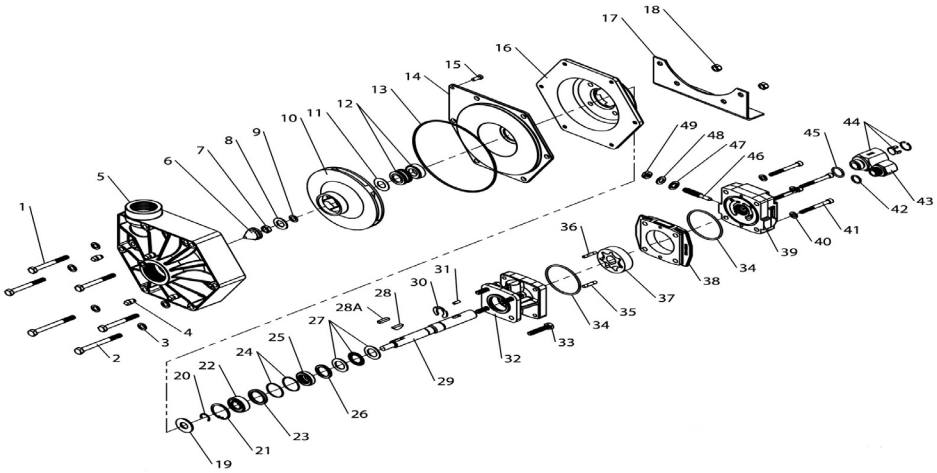

9303P-HM1C
9303P-HM2C
9303P-HM3C
9303P-HM4C
9303P-HM5C

HYDRAULIC MOTOR PART #'S		
PART#	MOTOR	PRICE
2500-0081C	HM1	1,240.40 **P**
2500-0082C	HM2	1,240.40 **P**
2500-0083C	HM3	1,452.38 **P**
2500-0084C	HM4	1,240.40 **P**
2500-0085C	HM5	1,240.40 **P**

Ref	Qnty	Part #	Description	Price
1	4	2210-0087	Hex Head Cap Screw	1.75 **A**
2	2	2210-0016	Hex Head Cap Screw (Base only)	1.80 **A**
3	6	2270-0041	Washer	1.53 **A**
5	**1**	**0700-9000P**	***Pump Casing**	**65.82 A**
6	1	2250-0052	Impeller Nut	2.31 A
7	1	2250-0051	Jam Nut	2.97 A
8	1	1700-0097	Gasket (viton)	10.84 **A**
9	1	2270-0057	Washer	3.22 **A**
10	1	0402-9100P	Impeller	77.44 **A**
11	1	1700-0100	Rubber Gasket	6.87 **A**
13	1	1721-0083	O-ring	23.72 **A**
14	**1**	**0750-9300P**	***Cover**	**29.27 A**
15	1	2210-0088	Screw	1.53 **A**
16	**1**	**0750-9006C**	***Intermediate Flange**	**283.48 A**
17	**1**	**1510-0063**	***Base Plate**	**50.99 A**
18	2	2250-0008	Hex Nut	2.33 **A**
19	1	1410-0056	Slinger Ring	1.84 **A**
20	1	1810-0014	Snap Ring	1.53 **A**
21	1	1820-0013	Retaining Ring	1.75 **A**
22	1	2000-0010	Ball Bearing	13.48 **A**
23	1	1410-0131	Cartridge, Front	16.82 **A**
24	2	1720-0268	O-ring	1.96 **A**
26	1	1410-0130	Seal Spacer	9.19 **A**
27	1	2029-0014	Thrust Bearing Assembly	43.76 **A**
28A	1	1610-0053	Square Key (only HM3C)	2.58 **A**
29	1	3430-0850	Shaft (HM2C/HM4C)	344.46 **A**
29	1	3430-0852	Shaft (HM1C/HM5C)	250.01 **A**
29	1	3430-0855	Shaft (HM3C)	443.62 **A**
30	1	1810-0026	Snap Ring	1.53 **A**
31	1	1610-0032	Roll Pin (HM2C/HM4C)	11.17 **A**

Ref	Qnty	Part #	Description	Price
31	1	1610-0031	Roll Pin (HM1C/HM5C)	6.32 **A**
31	1	1610-0055	Roll Pin (HM3C)	38.13 **A**
32	1	0150-2500C	Motor Body (includes needle bearing)	189.83 **A**
33	4	2210-0021	Hex Head Cap Screw	1.36 **A**
34	2	1720-0110	O-ring	1.75 **A**
35	1	1600-0045	Dowel Pin (HM2C/HM4C)	20.64 **A**
35	1	1600-0044	Dowel Pin (HM1C/HM5C)	25.99 **A**
35	1	1600-0052	Dowel Pin (HM3C)	37.07 **A**
36	1	1600-0068	Dowel Pin (HM3C)	16.79 **A**
36	1	1600-0042	Dowel Pin (HM2C/HM4C)	20.64 **A**
36	1	1600-0037	Dowel Pin (HM1C/HM5C)	25.99 **A**
37	1	3900-0022	Gerotor (HM1C)	269.48 **A**
37	1	3900-0023	Gerotor (HM2C)	244.48 **A**
37	1	3900-0024	Gerotor (HM3C)	341.70 **A**
37	1	3900-0025	Gerotor (HM4C)	265.29 **A**
37	1	3900-0048	Gerotor (HM5C)	273.65 **A**
38	1	0701-2500C1	Gerotor Housing (HM2C) 1/4" Wide	254.20 **A**
38	1	0700-2500C1	Gerotor Housing (HM1C) 1/2" Wide	173.64 **A**
38	1	0703-2500C1	Gerotor Housing (HM4C) 5/16" Wide	166.69 **A**
38	1	0702-2500C1	Gerotor Housing (HM3C) 1" Wide	268.07 **A**
38	1	0704-2500C1	Gerotor Housing (HM5C) 5/8" Wide	212.53 **A**
39	1	0254-2500C2	Motor End Plate (includes needle bearing)	201.01 **A**
40	4	2270-0039	Washer	1.47 **A**
41	4	2220-0032	Cap Screw (HM5C)	6.11 **A**
41	4	2220-0045	Cap Screw (HM2C/HM4C)	2.08 **A**
41	4	2220-0021	Cap Screw (HM1C)	2.62 **A**
41	4	2220-0044	Cap Screw (HM3C)	4.52 **A**
42	1	1720-0108	O-ring	1.53 **A**
43	1	3360-0021A	Pressure Port Adapter (includes o-ring)	32.10 **A**
44	1	3320-0051A	Tank Port Adapter (includes o-ring)	60.43 **A**
46	1	3220-0029	Bypass Adjusting Screw	12.47 **A**
47	1	1700-0047	Gasket	5.99 **A**
48	1	2270-0027	Washer	2.58 **A**
49	1	2250-0038	Lock Nut	1.47 **A**

*** DISCONTINUED - LIMITED QUANTITIES**

9306C, 9306S, 93076, 93079, 93100

John Deere
AN206042 = 9306C-HM5C-B
AN206253 = 9306C-HM5C
PM9306SHM5C = 9306S-HM5C

Rogator RG900, RG1100, RG1300
9306C-HM5C3U

Versatile
SX240, SX280 = 9306C-HM5C3U

HAGIE
691249 = 9306C-HM5C-BU

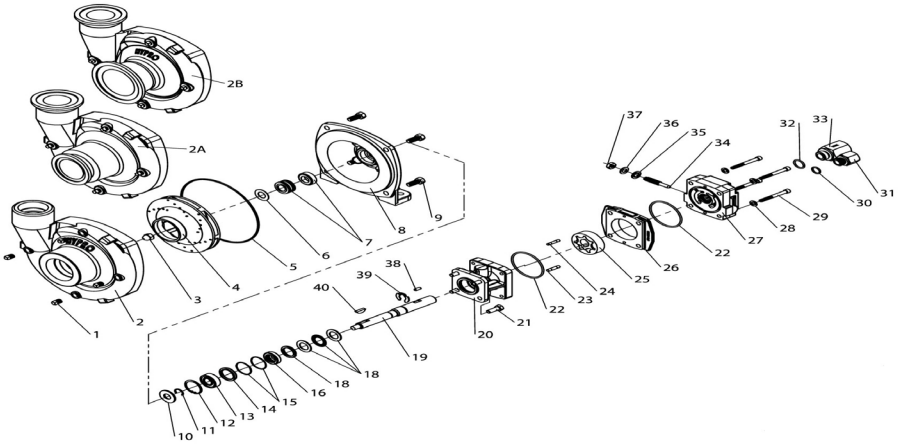

HYDRAULIC MOTOR PART #
2500-0081C (HM1C Models) $1,240.40 P
2500-0083C (HM3C Models) $1,452.38 P
2500-0085C (HM5C Models) $1,240.40 P

SILICON CARBIDE SEAL KIT
CONSISTS OF:
(1) REF 7 MECHANICAL SEAL
(1) REF 5 O-RING
PART# 3430-0589 $300.25 A

REPAIR PARTS KIT
CONSISTS OF:
(1) REF 7 MECHANICAL SEAL
(1) REF 5 O-RING
(1) REF 6 RUBBER GASKET
PART# 3430-0332 $83.01 A

REPAIR PARTS KIT
CONSISTS OF:
(1) REF 13 BALL BEARING
(1) REF 16 MOTOR SHAFT SEAL
(1) REF 35 THREADED SEAL GASKET
(2) REF 15 CARTRIDGE O-RING
(1) REF 36 WASHER
(2) REF 22 MOTOR HOUSING O-RING
(1) REF 30 & 32 PORT ADAPTER O-RINGS
PART# 3430-0748 $127.43 A

Ref #	Req'd	Part #	Description	Price
1	4	PLUG18	Drain/Vent Plug Poly	0.66 **D**
1	4	2406-0016	Drain/Vent Plug (9306S)	12.13 **A**
2	1	0154-9200C1	Pump Casing (9306C) Cast	494.47 **A**
2	**1**	**0154-9200S1**	***Pump Casing (9306S) Stainless Steel**	**1,013.59 A**
2A	1	0157-9200C	Pump Casing (Universal Flange 220x220)	294.47 **A**
2B	1	0158-9200C	Pump Casing (Universal Flange 300x220 Cast)	612.73 **A**
2B	1	0158-9200S	Pump Casing (Universal Flange 300x220 S.S.)	1,326.70 **A**
3	1	2253-0002	Impeller Nut (9306C, 93079)	8.09 **A**
4	1	0401-9200P2	Impeller (Nylon Std. 9306C, 63079, 93100)	148.61 **A**
4	1	0407-9306P	Impeller (GXT Optional)	227.36 **A**
5	1	1720-0083	O-ring	4.97 **A**
6	1	1700-0100	Gasket, not used with Silicon Carbide Seal	6.87 **A**
7	1	3430-0589	Mechanical Seal (Silicon Carbide) (Std. 9306S, 93079)	300.25 **A**
			Sames as John Deere AN206043	
8	1	0750-9300C2	Mounting Flange (9306C, 93079) Cast	170.86 **A**
8	1	0756-9300S	Mounting Flange (9306S) Stainless Steel	424.15 **A**
9	4	2210-0020	Hex Head Cap Screw (9306C)	1.32 **A**
9	4	2210-0125	Hex Head Cap Screw (9306S)	2.58 **A**
10	1	1410-0056	Slinger Ring	1.84 **A**
11	1	1810-0014	Snap Ring	1.53 **A**
12	1	1820-0013	Retaining Ring	1.75 **A**
13	1	2000-0010	Ball Bearing	13.48 **A**
14	1	1410-0131	Cartridge, Front	16.82 **A**
15	2	1720-0268	O-ring	1.96 **A**
17	1	1410-0130	Seal Spacer	9.19 **A**
18	1	2029-0014	Thrust Bearing Assembly	43.76 **A**
19	1	3430-0850	Shaft (HM2c/HM4C) Prev 0531-2500	344.46 **A**
19	1	3430-0852	Shaft (HM1C/HM5C, 93079) Prev 0533-2500	250.01 **A**
19	1	3430-0855	Shaft (HM3C) Prev 0536-2500	443.62 **A**
20	1	0150-2500C	Motor Body (includes needle bearing)	189.83 **A**

Ref #	Req'd	Part #	Description	Price
21	4	2210-0005	Hex Head Cap Screw	1.11 **A**
22	2	1720-0110	O-Ring	1.75 **A**
23	1	1600-0044	Dowel Pin (HM1C/HM5C, 93079)	25.99 **A**
23	1	1600-0052	Dowel Pin (HM3C)	37.07 **A**
24	1	1600-0037	Dowel Pin (HM1C/HM5C, 93079)	25.99 **A**
24	1	1600-0068	Dowel Pin (HM3C)	16.79 **A**
25	1	3900-0022	Gerator (HM1C, 93079)	269.48 **A**
25	1	3900-0024	Gerator (HM3C)	341.70 **A**
25	1	3900-0048	Gerator (HM5C)	273.65 **A**
26	1	0700-2500C1	Gerator Housing (HM1C Models, 93079) 1/2" wide	173.64 **A**
26	1	0702-2500C1	Gerator Housing (HM3C Models) 1" wide	268.07 **A**
26	1	0704-2500C1	Gerator Housing (HM5C Models, 93076) 5/8" wide	212.53 **A**
27	1	0254-2500C2	Motor End Plate (includes needle bearing)	201.01 **A**
28	4	2270-0039	Washer	1.47 **A**
29	4	2220-0045	Cap Screw (HM2C/HM4C Models)	2.08 **A**
29	4	2220-0021	Cap Screw (HM1C Models, 93079)	2.62 **A**
29	4	2220-0044	Cap Screw (HM3C Models)	4.52 **A**
29	4	2220-0032	Cap Screw (hm5C Models)	6.11 **A**
30	1	1720-0108	O-Ring	1.53 **A**
31	1	3360-0021A	Pressure Port Adapter (includes O-ring)	32.10 **A**
33	1	3320-0051A	Tank Port Adapter (includes O-ring)	60.43 **A**
34	1	3220-0029	Bypass Adjusting Screw	12.47 **A**
35	1	1700-0047	Gasket	5.99 **A**
36	1	2270-0027	Wahser	2.58 **A**
37	1	2250-0038	Lock Nut	1.47 **A**
38	1	1610-0032	Roll Pin (HM2C/HM4C)	11.17 **A**
38	1	1610-0031	Roll Pin (HM1C/HM5C)	6.32 **A**
38	1	1610-0055	Roll Pin (HM3C)	38.13 **A**
39	1	1810-0026	Snap Ring	1.53 **A**
40	**1**	**1610-0012**	***Woodruf Key (9306C)**	**1.78 A**

* DISCONTINUED - LIMITED QUANTITIES

(866)775-8089
FAX (701)775-8217

HYPRO DIAPHRAGM PUMP REPAIR PARTS

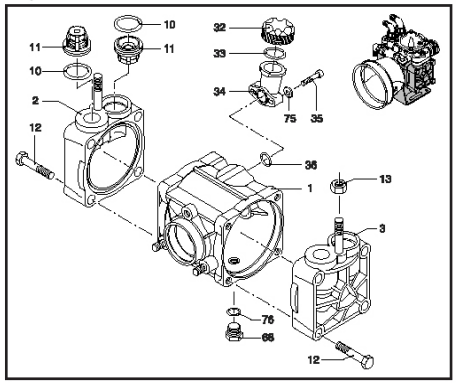

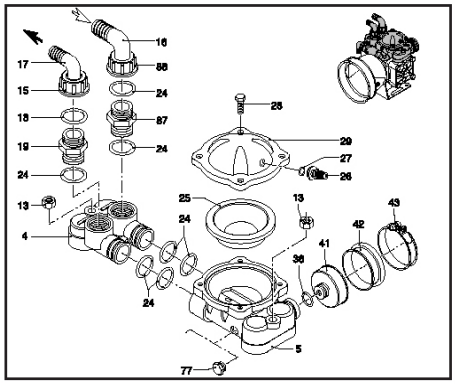

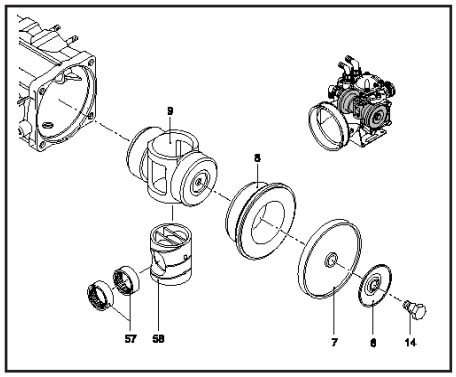

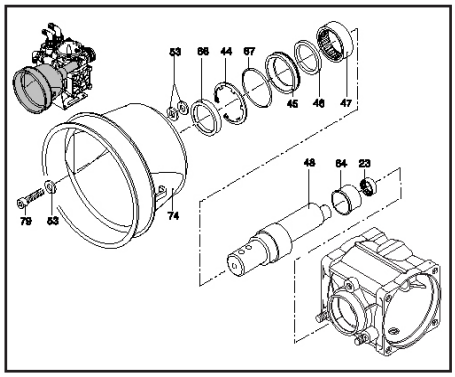

9910-D70

Part #	Description	Price
9910-KIT1720	Diaphragm Kit Desmopan	151.20 **A**
9910-KIT2364	Valve Kit	238.24 **A**
9910-KIT2365	O-ring Kit	25.65 **A**

Ref	Qnty	Part #	Description
1	**1**	**9910-550011**	***Pump Body with Bolts**
2	1	9910-550101	Right Head DX
3	1	9910-550102	Left Head SX
4	1	9910-550150	Manifold
5	1	9910-559200	Accumulator Manifold
6	2	9910-580370	Plate
7	2	9910-550080	Diaphragm
8	2	9910-550110	Sleeve
9	1	9910-550120	Piston
10	4	9910-320030	O-Ring
11	4	9910-759051	Complete Valve Assembly
12	8	9910-551040	Bolt
13	4	9910-180152	Nut
14	2	9910-580360	Diaphragm Bolt
15	1	9910-550880	Ring Nut
16	1	9910-580040	Elbow 1-1/4”
17	1	9910-550370	Elbow 1”
18	1	9910-550350	O-Ring
19	1	9910-550340	Threaded Adapter
23	1	9910-550310	Roller Bushing
24	7	9910-390290	O-Ring
25	1	9910-550190	Accumulator Diaphragm
26	1	9910-550300	Air Valve
27	1	9910-650542	Gasket
28	4	9910-550680	Bolt
29	1	9910-559204	Upper Air Chamber

Ref	Qnty	Part #	Description
32	1	9910-550057	Sight Glass Cap
33	1	9910-550040	O-Ring
34	1	9910-550030	Oil Sight Glass
35	2	9910-850851	Bolt
36	1	9910-180101	O-Ring
41	1	9910-650660	Diaphragm Holder
42	1	9910-650670	Diaphragm
43	1	9910-650690	Clamp
44	1	9910-200391	Retainer Ring
45	1	9910-550470	Seal Ring
46	1	9910-550070	Spacer Ring
47	1	9910-550060	Roller Bushing
48	1	9910-550170	Shaft
53	5	9910-320621	Washer
57	2	9910-550280	Bearing
58	1	9910-550140	Cylinder
64	1	9910-550160	Spacer
66	1	9910-550491	Seal Ring
67	1	9910-650920	O-Ring
68	1	2406-0023	Oil Drain Plug
74	1	9910-1500350	Shield
75	2	9910-550332	Washer
76	1	9910-740290	O-Ring
77	1	9910-330173	Plug
79	1	9910-620472	Bolt
87	1	9910-450120	Threaded Adapter
88	1	9910-550870	Ring Nut

*** DISCONTINUED - LIMITED QUANTITIES**

HYPRO DIAPHRAGM PUMP REPAIR PARTS

9910-D115 & 9910-D135

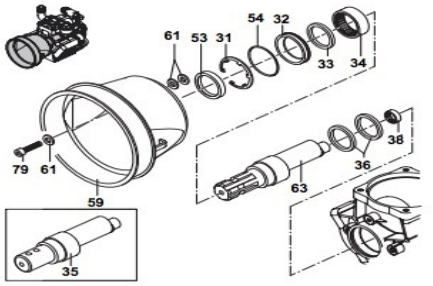

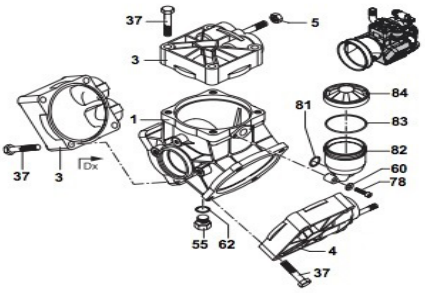

Part #	Description
9910-KIT1721	Diaphragm Kit Desmopan
9910-KIT2370	Valve Kit
9910-KIT2026	O-ring Kit

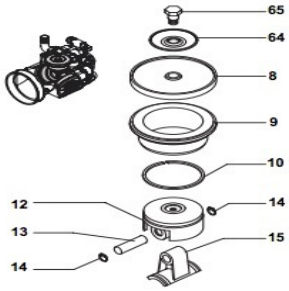

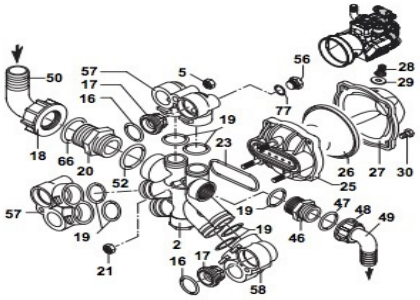

Ref	Qnty	Part #	Description
1	1	9910-580013	Pump Body with Bolts
2	1	9910-580150	Manifold
3	2	9910-550101	DX Right Head
4	1	9910-550102	SX Left Head
5	3	9910-180152	Nut
8	8	9910-550085	Diaphragm (Desmopan) Standard
9	3	9910-580110	Sleeve (D115)
9	3	9910-580350	Sleeve (D135)
10	3	9910-500260	Piston Ring
12	3	9910-580120	Piston
13	3	9910-380300	Pin
14	6	9910-380080	Pin Ring
15	3	9910-580140	Connecting Rod
16	6	9910-320030	O-Ring
17	6	9910-759051	Complete Valve
18	1	9910-540541	Ring Nut
19	7	9910-390291	O-Ring
20	1	9910-540530	Threaded Adapter
21	3	9910-390271	Nut
23	1	9910-580050	Gasket
25	1	9910-580180	Accumulator Manifold
26	1	9910-550190	Accumulator Diaphragm
27	1	9910-559204	Accumulator Head
28	1	9910-550300	Air Valve
29	1	9910-650542	O-Ring
30	4	9910-550680	Bolt
31	1	9910-200391	Retaining Ring
32	1	9910-550470	Gasket Retainer
33	1	9910-550070	Spacer Ring
34	1	9910-550060	Roller Bearing
35	1	9910-550170	Shaft (D115)

Ref	Qnty	Part #	Description
36	2	9910-580470	Connecting Rod Ring
37	12	9910-551040	Bolt
38	1	9910-550310	Roller Bushing
46	1	9910-550340	Threaded adapter
47	1	9910-550350	O-Ring
48	**1**	**9910-550242**	**Ring nut**
49	1	9910-550370	Elbow 1”
50	1	9910-540550	Elbow 1-1/2”
52	1	9910-250310	O-Ring
53	1	9910-550491	Seal Ring
54	1	9910-650920	O-Ring
55	1	2406-0023	Oil Drain Plug
56	1	9910-330173	Plug
57	2	9910-589200	DX Right Valve Retainer w/Plug/O-Ring
58	1	9910-580072	SX Left Valve Retainer
59	1	9910-1500350	Shield
60	2	9910-550332	Washer
61	5	9910-320621	Washer
62	1	9910-740290	O-Ring
63	1	9910-580330	Shaft (D135)
64	3	9910-580370	Plate
65	3	9910-580360	Diaphragm Bolt
66	1	9910-250310	O-Ring
77	1	9910-180101	O-Ring
78	2	9910-850851	Bolt
79	3	9910-620472	Bolt
81	1	9910-390180	O-Ring
82	1	9910-1040310	Oil Sight Glass
83	1	9910-650920	O-Ring
84	1	9910-1040322	Black Oil Tank Cap

HYPRO DIAPHRAGM PUMP REPAIR PARTS

9910-D160

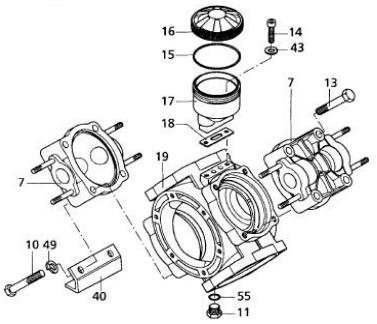

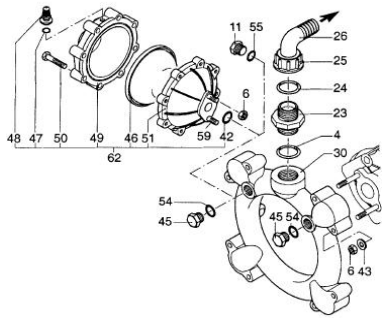

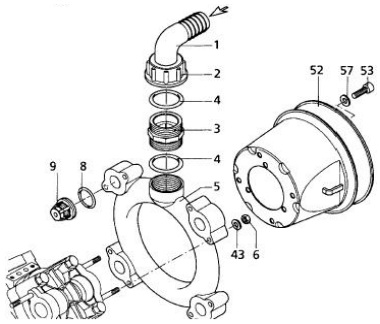

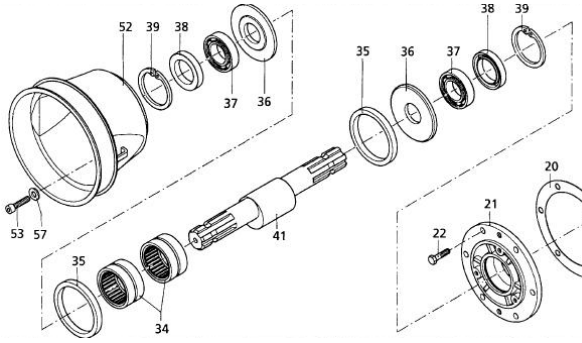

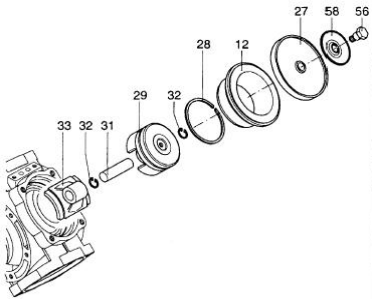

Ref	Qnty	Part #	Description
32	8	9910-160691	Pin ring
33	4	9910-760140	Connecting Rod
34	2	9910-750090	Roller Bearing
35	2	9910-750130	Connecting Rod Ring
36	2	9910-540040	Spacer Washer
37	2	9910-230350	Bearing
38	2	9910-160740	Seal Ring
39	2	9910-200390	Retainer Ring
40	2	9910-760201	Base
41	1	9910-750170	Crankshaft
42	1	9910-390290	O-Ring
43	18	9910-380243	Washer
44	4	9910-250143	Washer
45	2	9910-330173	Plug
46	1	9910-550190	Accumulator Diaphragm
47	1	9910-650542	O-Ring
48	1	9910-180020	Air Valve
49	1	9910-629216	Accumulator Head
50	8	9910-621781	M8 x 40 Bolt
51	1	9910-680180	Accumulator Body
52	2	9910-1500350	Shield
53	6	9910-850251	M8 x 12 Bolt
54	2	9910-180101	O-Ring
55	2	9910-740290	O-Ring
56	4	9910-2240110	Diaphragm Nut
57	6	9910-390314	Washer
58	4	9910-751250	Retaining Washer
61	4	9910-2240100	Diaphragm Stud
74	1	9910-751140	O-ring

Ref	Qnty	Part #	Description
5	**1**	**9910-760750**	**Suction Manifold**
6	18	9910-380242	Nut
8	8	9910-680070	O-ring
9	8	9910-759051	Complete Vavle
10	8	9910-750071	Bolt
11	2	2406-0023	Oil Drain Plug
12	4	9910-750110	Sleeve
13	12	9910-750061	M12 x 65 Bolt
14	2	9910-680350	M8 x 35 Bolt
15	1	9910-1040060	O-Ring
16	1	9910-750057	Black Oil Tank Cap
17	1	9910-750030	Oil sight glass
18	1	9910-750040	Gasket
19	1	9910-761010	Pump body
20	1	9910-851360	O-ring
21	1	9910-680020	Bearing Support Housing
22	6	9910-160672	M10 x 25 Bolt
23	1	9910-751130	Threaded adapter
24	1	9910-390290	O-Ring
25	1	9910-750670	Ring nut
26	1	9910-3040160	Elbow 1-1/2”
27	4	9910-550085	Diaphragm (Desmopan) Standard
28	4	9910-500260	Piston Ring
29	4	9910-750122	Piston
30	**1**	**9910-760760**	**Manifold DISCONTINUED**
31	4	9910-160700	Pin

HYPRO DIAPHRAGM PUMP REPAIR PARTS

9910-D250

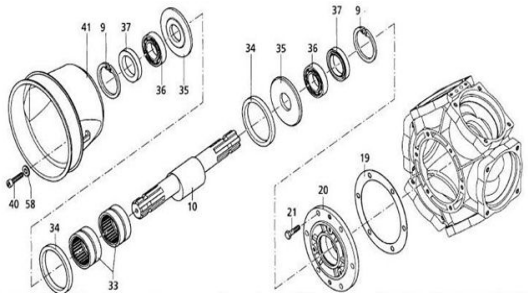

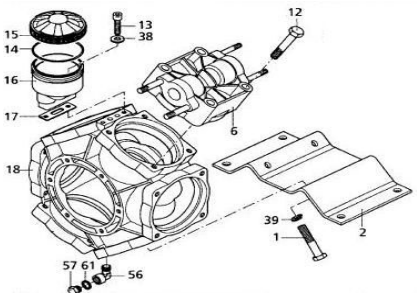

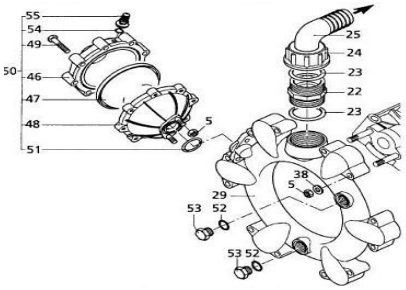

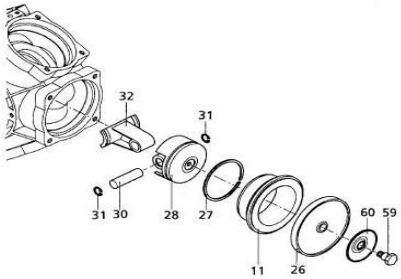

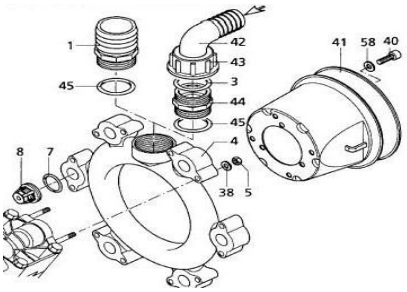

Ref	Qnty	Part #	Description
2	1	9910-750200	Base
3	2	9910-750740	O-Ring
4	1	9910-751070	Suction Manifold
5	26	9910-380242	Nut
6	6	9910-751350	Head
7	12	9910-680070	O-Ring
8	12	9910-759051	Complete Valve
9	2	9910-200390	Retainer Ring
10	1	9910-750170	Crankshaft
11	6	9910-750110	Sleeve
12	20	9910-750061	Bolt
13	2	9910-680350	Bolt
14	1	9910-1040060	O-Ring
15	1	9910-750057	Black Oil Tank Cap
16	1	9910-750030	Oil Sight Glass
17	1	9910-750040	Gasket
18	1	9910-751300	Pump Body
19	1	9910-851360	Gasket
20	1	9910-680020	Shaft Support
21	6	9910-160672	Bolt
22	1	9910-751130	Threaded Adapter
23	1	9910-751140	O-Ring
23A	1	9910-390290	O-ring
24	1	9910-750670	Ring Nut
25	1	9910-3040160	Elbow 1-1/2”
26	6	9910-550080	Diaphragm
27	6	9910-500260	Piston Ring
28	6	9910-750122	Piston
29	1	9910-751080	Manifold

Ref	Qnty	Part #	Description
30	6	9910-160700	Pin
31	2	9910-160691	Pin Ring
32	6	9910-750140	Connecting Rod
33	2	9910-750090	Roller Bearing
34	2	9910-750130	Connecting Rod Ring
35	2	9910-540040	Spacer Washer
36	2	9910-230350	Bearing
37	2	9910-160740	Seal Ring
38	26	9910-380243	Washer
39	4	9910-250143	Washer
40	6	9910-850251	Bolt
41	2	9910-1500350	Shield
42	1	9910-750850	Elbow 2”
43	1	9910-750710	Ring Nut
46	1	9910-620232	Accumulator Head
47	1	9910-550190	Accumulator Diaphragm
48		9910-680180	Accumulator Body
49	8	9910-621781	Bolt
51	1	9910-390290	O-Ring
52	2	9910-180101	O-Ring
53	2	9910-330173	Plug
54	1	9910-650542	Gasket
55	1	9910-180020	Air Valve
56	1	9910-750370	Elbow
57	1	9910-880581	Oil Drain Plug
58	6	9910-390314	Washer
59	6	9910-2240110	Diaphragm Nut
60	6	9910-751250	Retainer Washer
62	1	9910-2240100	Diaphragm Stud

(866)775-8089
FAX (701)775-8217

ACE BELT & CLUTCH DRIVE FRAME PUMPS

FMC-CW-150

FMC-CW-150-MAG

FMC-CW-200

PERFORMANCE CHART CW-150							
PUMP SHAFT RPM	20 PSI GPM	30 PSI GPM	40 PSI GPM	60 PSI GPM	80 PSI GPM	100 PSI GPM	MAX HP
3200	70	55	5	X	X	X	1.4
3800	75	70	60	10	X	X	1.8
4400	80	78	72	60	X	X	3
5200	80	80	78	75	70	30	4.7

FEATURES:
CLOCKWISE ROTATION
HIGH PERFORMANCE TO 100 PSI
VALOX IMPELLER (CAST IRON OPTIONAL)
STAINLESS STEEL SHAFT
STANDARD VITON SEALS
(SILICONE.CARBIDE OPTIONAL)
AVAILABLE CLUTCH DRIVE (5-1/4" PULLEY)

PERFORMANCE CHART CW-200							
PUMP SHAFT RPM	20 PSI GPM	30 PSI GPM	40 PSI GPM	60 PSI GPM	80 PSI GPM	100 PSI GPM	MAX HP
2800	100	40	X	X	X	X	1.7
3200	125	100	90	X	X	X	3
3600	140	125	110	X	X	X	3.7
4000	160	140	135	90	X	X	4.5
4600	180	165	160	140	60	X	7

FEATURES:
CLOCKWISE ROTATION
HIGH PERFORMANCE TO 180 PSI
CAST IRON IMPELLER
STAINLESS STEEL SHAFT
STANDARD VITON SEAL
(SILICONE/CARBIDE OPTIONAL)
AVAILABLE CLUTCH DRIVE (5-1/4" PULLEY)

PUMP RPM / DRIVE SHAFT RPM = DRIVE PULLEY DIAMETER / PUMP PULLEY DIAMETER

OR PUMP RPM X PUMP PULLEY DIAMETER DIVIDED BY DRIVE SHAFT RPM EQUALS DRIVE PULLEY DIAMETER

EXAMPLE: TO DRIVE FMC-150 AT 5000 RPM
WITH PUMP PULLEY OF 5-1/4" DIA.
AND DRIVE SHAFT RPM OF 3600.

5000 X 5.25 = 26250
26250/3600 = 7.29

ROUND ANSWER TO CLOSEST 1/4"
DRIVE PULLEY SHOULD BE 7.25"

PART #	INLET SIZE	OUTLET SIZE	MAX GPM	MAX PSI	SEAL TYPE	12V CLUTCH	PRICE
FMC-CW-150	1-1/2"	1-1/4"	80	100	VITON	NO	643.79 **A**
FMCSC-CW-150	1-1/2"	1-1/4"	80	100	SIL/CARB	NO	735.37 **A**
FMC-CW-150-MAG-D	1-1/2"	1-1/4"	80	100	VITON	YES	1,091.58 **A**
FMCSC-CW-150-MAG-D	1-1/2"	1-1/4"	80	100	SIL/CARB	YES	1,319.58 **A**
FMC-CW-200	2"	1-1/2"	180	100	VITON	NO	849.19 **A**
FMCSC-CW-200	2"	1-1/2"	180	100	SIL/CARB	NO	940.77 **A**
FMC-CW-200-MAG-D	2"	1-1/2"	180	100	VITON	YES	1,327.87 **A**
FMCSC-CW-200-MAG-D	2"	1-1/2"	180	100	SIL/CARB	YES	1,644.14 **A**

ACE HYDRAULIC DRIVE CENTRIFUGAL PUMPS

FMC-150-HYD-206

FMC-200-HYD-304

PERFORMANCE CHART FMC-150-HYD-206					
SHUT-OFF 0 GPM	40 GPM	60 GPM	80 GPM	100 GPM	120 GPM
120 PSI	116 PSI	112 PSI	110 PSI	88 PSI	53 PSI
100 PSI	97 PSI	92 PSI	84 PSI	74 PSI	46 PSI
80 PSI	75 PSI	70 PSI	61 PSI	52 PSI	20 PSI
60 PSI	57 PSI	57 PSI	43 PSI	29 PSI	X

USE THE SHUT-OFF PRESSURE OF YOUR SPRAYING SYSTEM TO DETERMINE WHICH LINE OF DATA APPLIES. THE HYDRAULIC SYSTEM INPUT PRESSURE AND FLOW WILL VARY WITHIN THE CHART. CONTACT FACTORY FOR MORE DATA

MAXIMUM SHUT-OFF PRESSURE 120 PSI

PERFORMANCE CHART FMC-200-HYD-304					
SHUT-OFF 0 GPM	40 GPM	80 GPM	120 GPM	160 GPM	200 GPM
120 PSI	114 PSI	100 PSI	85 PSI	65 PSI	36 PSI
100 PSI	92 PSI	83 PSI	68 PSI	52 PSI	X
80 PSI	76 PSI	68 PSI	57 PSI	43 PSI	X
60 PSI	56 PSI	50 PSI	40 PSI	X	X

USE THE SHUT-OFF PRESSURE OF YOUR SPRAYING SYSTEM TO DETERMINE WHICH LINE OF DATA APPLIES. THE HYDRAULIC SYSTEM INPUT PRESSURE AND FLOW WILL VARY WITHIN THE CHART. CONTACT FACTORY FOR MORE DATA

MAXIMUM SHUT-OFF PRESSURE 120 PSI

FEATURES FMC-150-HYD-206:

1-1/2" SUCTION, 1-1/4" DISCHARGE
STANDARD VITON SEALS (SIL/CARB OPTIONAL)
VALOX IMPELLER (CAST IRON OPTIONAL)
STAINLESS STEEL SHAFT
STAINLESS STEEL WEAR RING

RECOMMENDED FOR USE ON THE FOLLOWING HYDRAULIC SYSTEMS:

PRESSURE COMPENSATING CLOSED CENTER
LOAD SENSING OR PRESSURE FLOW-COMPENSATING CLOSED CENTER
OPEN CENTER FROM 7-16 GPM
INTEGRAL NEEDLE VALVE BYPASSES UP TO 9 GPM ON OPEN CENTER SYSTEMS

206 MOTOR REQUIRES 7 GPM HYDRAULIC FLUID INPUT

FEATURES FMC-200-HYD-304:

2" SUCTION, 1-1/2" DISCHARGE
STANDARD VITON SEALS (SIL/CARB OPTIONAL)
VALOX IMPELLER (CAST IRON OPTIONAL)
STAINLESS STEEL SHAFT
STAINLESS STEEL WEAR RING

RECOMMENDED FOR USE ON THE FOLLOWING HYDRAULIC SYSTEMS:

PRESSURE COMPENSATING CLOSED CENTER
LOAD SENSING OR PRESSURE FLOW-COMPENSATING CLOSED CENTER
OPEN CENTER FROM 10-20 GPM
INTEGRAL NEEDLE VALVE BYPASSES UP TO 9 GPM ON OPEN CENTER SYSTEMS

304 MOTOR REQUIRES 11 GPM HYDRAULIC FLUID INPUT

ACE HYDRAULIC DRIVE HIGH PERFORMANCE PUMPS							
PART #	INLET SIZE	OUTLET SIZE	MAX GPM	MAX PSI	SEAL TYPE	IMPELLER TYPE	PRICE
FMC150-HYD-206	1-1/2"	1-1/4"	120	120	VITON	VALOX	1,223.54 **A**
FMCSC150-HYD-206	1-1/2"	1-1/4"	120	120	SIL/CARB	VALOX	1,304.94 **A**
FMC-200-HYD-304	2"	1-1/2"	200	120	VITON	VALOX	1,449.60 **A**
FMCSC-200-HYD-304	2"	1-1/2"	200	120	SIL/CARB	VALOX	1,531.00 **A**

ACE HYDRAULIC DRIVE CENTRIFUGAL PUMPS

FMCSC-205F-HYD-304

FMCSC-205FS-HYD-304

FEATURES
FMCSC-205F-HYD-304
FMCSC-205FS-HYD-304

* SUCTION 300 SEREIES FLANGE
* DISCHARGE 220 SERIES FLANGE
* -FS MODEL - 316 STAINLESS STEEL
* RECOMMENDED FOR USE ON THE FOLLOWING HYDRAULIC SYSTEMS:
  - # PRESSURE COMPENSTAING CLOSED CENTER
  - # LOAD SENSING OR PRESSURE FLOW COMPANSATING CLOSED SYSTEM
  - # OPEN CENTER FROM 10 TO 20 GPM (38 TO 75 LPM) - INTEGRAL NEEDLE VALVE BYPASSES UP TO 9 GPM (34 LPM)
* SEVERE DUTY SILICON CARBIDE MECHANICAL SEAL WITH O-RING SEAT FOR IMPROVED SURVIVABILITY
* LARGER 203 BEARING FOR LONGER LIFE
* CHEMICAL RESISTANT VALOX IMPELLER AND OPTIONAL CAST IRON OR 316 STAINLESS STEEL AVAILABLE

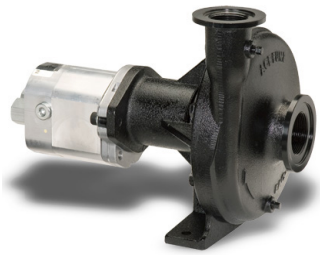

FMC-650F-HYD

FMC-650FS-HYD

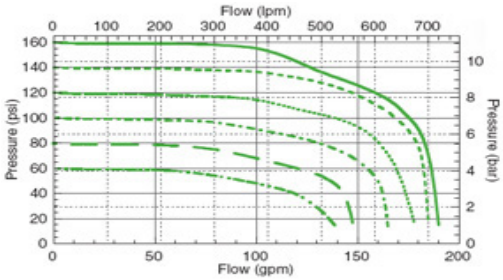

OIL FLOW	
GPM	LPM
14.5	54.9
13.6	51.5
12.4	46.9
11.3	42.8
9.8	37.1
8.3	31.4

FEATURES
FMC-650F-HYD
FMC-650FS-HYD

* SUCTION 220 FLANGE & 1-1/2" NPT
* DISCHARGE 200 FLANGE & 1-1/4" NPT
* HIGH PERFORMACNE PUMP
  - # MAXIMUM FLOW 170 GPM (644 LPM)
  - # MAXIMUM PRESSURE 160 PSI (11 BAR)
  - # MODIFIED IMPELLER DESIGN FOR HIGHER PRESSURE AT LOWER RPM
* MAXIMUM RELIABILITY
  - # -FS MODEL - 316 STAINLESS STEEL
  - # OPERATES AT LOWER RPM FOR LONGER LIFE
  - # OVERSIZED BEARINGS
  - # E-COAT CORROSION PROTECTION
  - # HIGH EFFICIENCY 4000 PSI (275 BAR) PRESSURE PLATED GEAR MOTOR
  - # OPTIONAL CASE DRAIN

ACE HYDRAULIC DRIVE PUMPS					
	INLET	OUTLET	MAX	MAX	
PART #	SIZE	SIZE	GPM	PSI	PRICE
FMCSC-205F-HYD-304	300 Flange	220 Flange	240	120	1,656.67 **A**
FMCSC-205FS-HYD-304	300 Flange	200 Flange	240	120	2,663.65 **A**
FMCSC-205F-HYD-304-PWM	300 Flange	220 Flange	240	120	2,632.03 **A**
FMCSC-205FS-HYD-304-PWM	300 Flange	220 Flange	240	120	3,639.00 **A**
FMC-650F-HYD	220 Flange & 1-1/2" NPT	200 Flange & 1-1/4" NPT	170	160	1,967.31 **A**
FMC-650FS-HYD	220 Flange & 1-1/2" NPT	200 Flange & 1-1/4" NPT	170	160	2,835.17 **A**

ACE PEDESTAL PUMP
REPAIR PARTS

FMC-CW-150
FMC-CW-150SC
FMC-CW-150-MAG
FMC-CW-150-MAG-SC

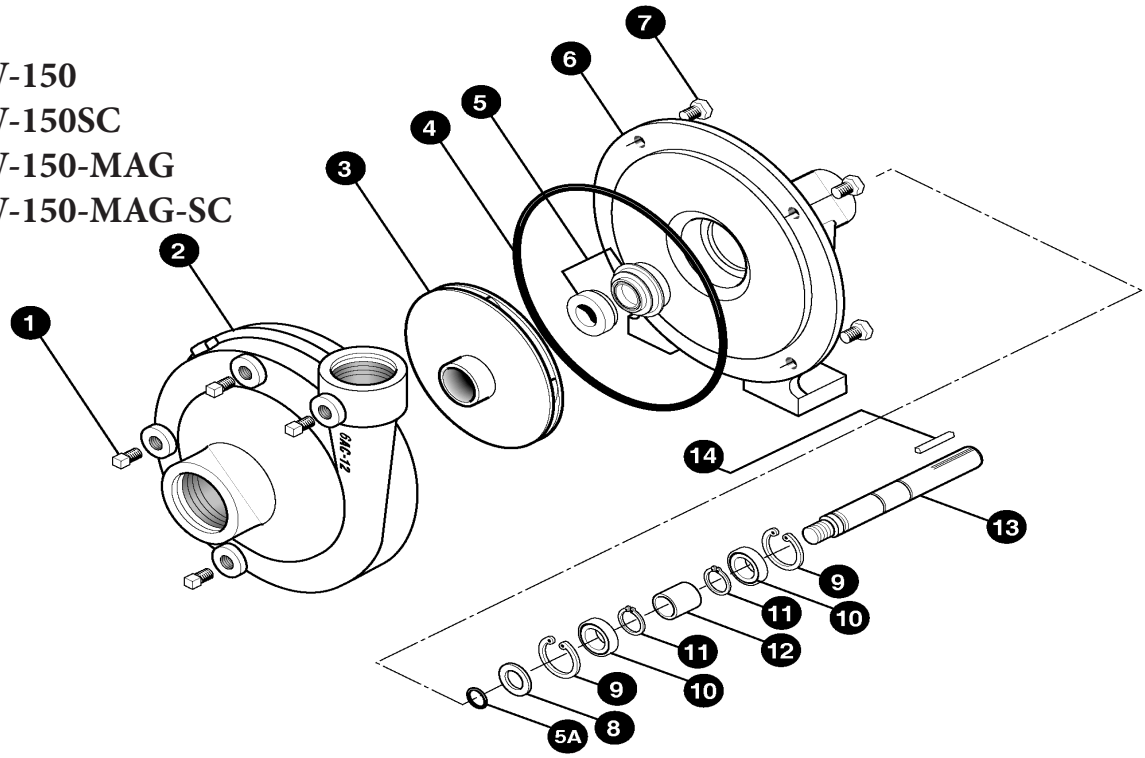

Ref #	Req'd	Part #	Description	Price
1	4	BAC-53 (41110)	Pipe plug, 1/8" NPT	0.75 **A**
1	4	41120	Pipe plug, 1/8" NPT, stainless steel (opt)	5.92 **A**
2	1	6AC-12	Volute, 1 1/2" x 1 1/4", clockwise rotation, cast iron	376.92 **A**
3	1	BAC-26-CW-150-P	Impeller, 5 1/2" dia., right hand NF thread, thermoplastic	106.96 **A**
3	1	BAC-26-CW-150-CI	Impeller, 5 1/2" dia., right hand NF thread, cast iron (opt)	241.82 **A**
*4	1	BAC-4A	O-ring for BAC-12 volute seal, 4/96	9.14 **A**
*4	1	BAC-4	Gasket, 4 hole	4.70 **A**
*5	1	BAC-7V	Seal, Viton mechanical seal (includes 40160 o-ring)	57.80 **A**
5	1	BAC-7SC	Seal, silicon carbide mechanical seal (includes 40160 o-ring)(opt)	199.32 **A**
5A	1	40160	O-ring for BAC-6 shaft	1.24 **A**
6	1	BAC-14-F	Mounting frame	315.92 **A**
7	4	40930	Cap screw, 3/8" NC x 3/4" hex head, stainless steel (opt)	2.72 **A**
7	4	40950	Cap screw, 3/8" NC x 3/4" hex head	0.75 **A**
8	1	BAC-54	Slinger	2.25 **A**
9	2	BAC-33	Snap ring, internal, BAC-14 mounting frame	2.25 **A**
10	2	BAC-37	Bearing, BAC-6 driven shaft	22.98 **A**
11	2	BAC-32	Snap ring, external, BAC-6 driven shaft	0.75 **A**
12	1	BAC-32-S	Spacer for BAC-6 shaft	6.92 **A**
13	1	BAC-6-CW-SS	Shaft, 5/8" driven, right hand NF thread, stainless steel	174.14 **A**
14	1	BAC-50	Key, 3/16" x 3/16" x 1 1/4"	1.75 **A**
*	1	RK-FMC	Repair Kit for FMC Series Includes *	68.66 **A**

(866)775-8089
FAX (701)775-8217

ACE PEDESTAL PUMP
REPAIR PARTS

FMC-CW-200
FMC-CW-200-SC
FMC-CW-200-MAG
FMC-CW-200-MAG-SC

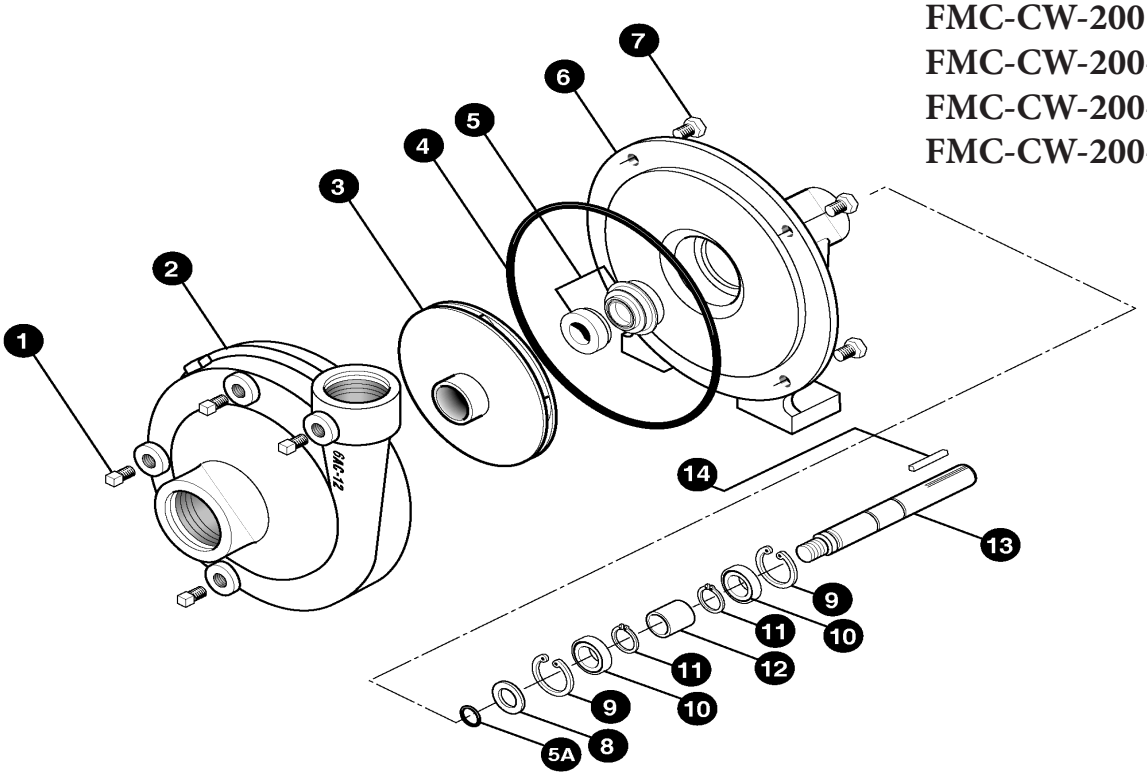

Ref #	Req'd	Part #	Description	Price
1	4	BAC-53 (41110)	Pipe plug, 1/8" NPT	0.75 **A**
1	4	41120	Pipe plug, 1/8" NPT, stainless steel (opt)	5.92 **A**
2	1	7AC-14-4	Volute, 2" x 1 1/2", clockwise rotation, cast iron	413.72 **A**
3	1	BAC-26-CW-200-CI	Impeller, 5 1/8" dia., right hand NF thread, cast iron	322.34 **A**
*4	1	BAC-4A	O-ring for BAC-12 volute seal, 4/96	9.14 **A**
*4	1	BAC-4	Gasket, 4 hole	4.70 **A**
*5	1	BAC-7V	Seal, Viton mechanical seal (includes 40160 o-ring)	57.80 **A**
5	1	BAC-7SC	Seal, silicon carbide mechanical seal (includes 40160 o-ring)(opt)	199.32 **A**
5A	1	40160	O-ring for BAC-6 shaft	1.24 **A**
6	1	BAC-14-F	Mounting frame	315.92 **A**
7	4	40930	Cap screw, 3/8" NC x 3/4" hex head, stainless steel (opt)	2.72 **A**
7	4	40950	Cap screw, 3/8" NC x 3/4" hex head	0.75 **A**
8	1	BAC-54	Slinger	2.25 **A**
9	2	BAC-33	Snap ring, internal, BAC-14 mouting frame	2.25 **A**
10	2	BAC-37	Bearing, BAC-6 driven shaft	22.98 **A**
11	2	BAC-32	Snap ring, external, BAC-6 driven shaft	0.75 **A**
12	1	BAC-32-S	Spacer for BAC-6 shaft	6.92 **A**
13	1	BAC-6-CW-SS	Shaft, 5/8" driven, right hand NF thread, stainless steel	174.14 **A**
14	1	BAC-50	Key, 3/16" x 3/16" x 1 1/4"	1.75 **A**
*	1	RK-FMC	Repair Kit for FMC Series Includes *	68.66 **A**

ACE HYDRAULIC PUMP REPAIR PARTS

FMC-150-HYD-206
FMC-150-HYD-206-SC

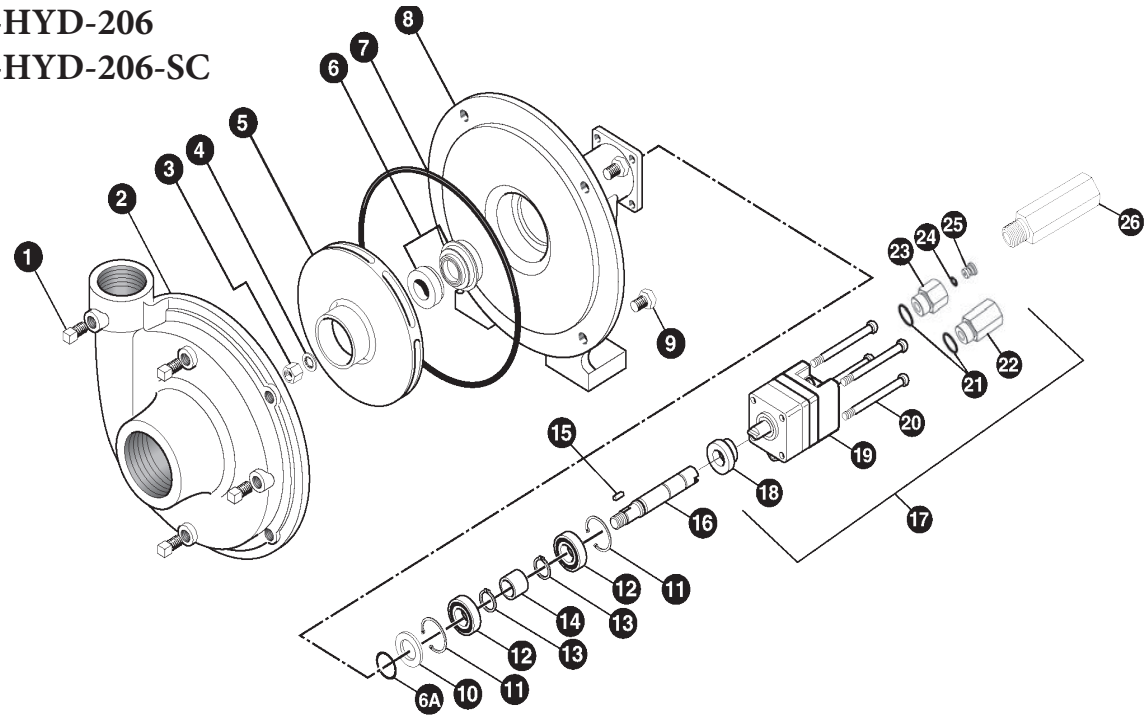

Ref #	Req'd	Part #	Description	Price
1	4	BAC-53	Pipe plug	0.75 **A**
1	4	41120	Pipe plug, stainless steel (opt)	5.92 **A**
2	1	BAC-12-150	Volute, 1 1/2" x 1 1/4"	376.92 **A**
3	1	BAC-23-A SS	Nut, 3/8" NF, cad plated	10.62 **A**
4	1	BAC-24-HYD-SS	Washer, 3/8" star, stainless steel	1.75 **A**
5	1	BAC-26-150-P	Impeller, Valox, keyway	106.96 **A**
5	1	BAC-26-150-CI	Impeller, cast iron, keyway (opt)	263.54 **A**
6	1	BAC-7V	Seal, mechanical, Viton (includes 40160 O-ring)	57.80 **A**
6	1	BAC-7SC	Seal, mechanical, silicon carbide (includes 40160 O-ring)(opt)	199.32 **A**
6A	1	40160	O-ring, shaft seal	1.24 **A**
7	1	BAC-4-150	O-ring, body seal	9.14 **A**
8	1	BAC-14-150-HYD	Mouting frame (for 200 series hydraulic motor)	469.30 **A**
9	4	40950	Cap screw, 3/8" NC x 3/4" hex head	0.75 **A**
9	4	40930	Cap screw, 3/8" NC x 3/4" hex head, stainless steel (opt)	2.72 **A**
10	1	BAC-54	Slinger	2.25 **A**
11	2	BAC-33	Snap ring, internal, BAC-14 mounting frame	2.25 **A**
12	2	BAC-37	Ball Bearing, sealed, BAC-6 shaft	22.98 **A**
13	2	BAC-32	Snap ring, external, BAC-6 shaft	0.75 **A**
14	1	BAC-32-S	Spacer for BAC-6 shaft	6.92 **A**
15	1	BACH-25	Key, 1/8" x 1/8" x 1/2"	1.25 **A**
16	1	BAC-6-HYD-SS	Shaft, 5/8" dia., keyway & tang slot, stainless steel (opt)	155.62 **A**
17	1	BAC-75-HYD-206	Hydraulic motor , 7 GPM (includes parts 18-25)	659.79 **A**
18	1	S200	Seal support spacer for 200 series HYD motor, 6/00	11.60 **A**
20	4	41255	Cap screw, 5/16" NC x 3-3/4" Hex head (for 206 motor)	2.22 **A**
26	1	LS-206N	Flow limiting valve (206N), #8 SAE male x 1/2" NPT female	101.28 **A**
		RK-FMC-150	Repair kit for FMC-150 series pump	68.66 **A**
		RK-BAC-75-HYD-L	Repair kit for 200-L Series motor	71.38 **A**

(866)775-8089
FAX (701)775-8217

ACE HYDRAULIC PUMP REPAIR PARTS

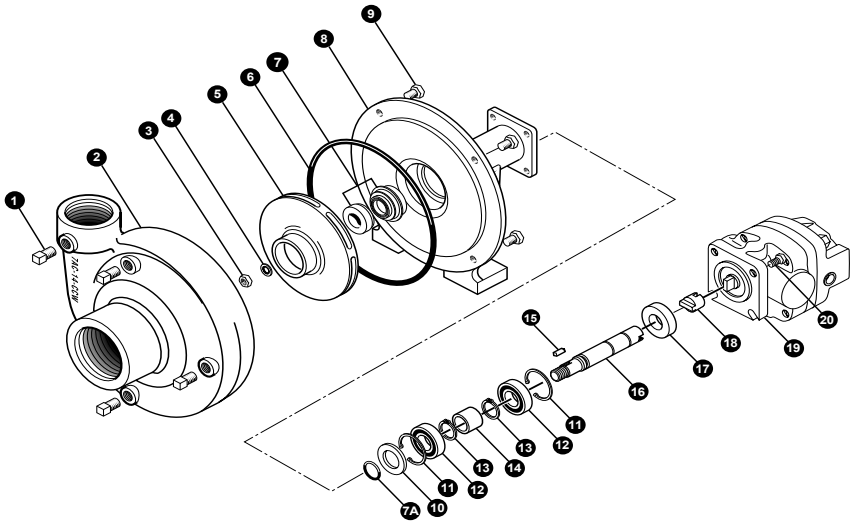

FMC-200-HYD-304
FMC-200-HYD-304-SC

Ref #	Req'd	Part #	Description	Price
1	4	BAC-53	Pipe Plug	0.75 **A**
1	4	41120	Pipe Plug, stainless steel (optional)	5.92 **A**
2	1	7AC-14-CCW	Volute, 2" x 1 1/2"	413.72 **A**
3	1	BAC-23-A SS	Nut, 3/8" NF, cad plated	10.62 **A**
4	1	BAC-24-HYD-SS	Washer, 3/8" star, stainless steel	1.75 **A**
5	1	BAC-26-200-CI	Impeller, w/extended keyway, cast iron (date code E-9 & up)	322.34 **A**
5	1	BAC-26-200-P	Impeller, w/extended keyway, thermoplastic	154.62 **A**
5	1	BAC-26-HYD-200-CI	Impeller, cast iron,keyway(obsolete 6/99)	322.34 **A**
6	1	BAC-4	Gasket, 4 hole	4.70 **A**
6	1	BAC-4A	O-ring, body seal 4/96	9.14 **A**
7	1	BAC-7V	Seal, mechanical, Viton (includes 40160 o-ring)	57.80 **A**
7	1	BAC-7SC	Seal, mechanical, silicon carbide (includes 40160 o-ring)	199.32 **A**
7A	1	40160	O-ring, shaft seal	1.24 **A**
8	1	BAC-14-HYD-300	Mounting frame (for -300 series hyd motor)	413.72 **A**
9	4	40950	Cap screw, 3/8" NC x 3/4" hex head	0.75 **A**
9	4	40930	Cap screw, 3/8" NC x 3/4" hex head, ss (optional)	2.72 **A**
10	1	BAC-54	Slinger	2.25 **A**
11	2	BAC-33	Snap ring, internal, BAC-14 mouting frame	2.25 **A**
12	2	BAC-37	Ball bearing, sealed, BAC-6 shaft	22.98 **A**
13	2	BAC-32	Snap ring, external, BAC-6 shaft	0.75 **A**
14	1	BAC-32-S	Spacer for BAC-6 shaft	6.92 **A**
15	1	BAC-25	Key,1/8" x 1/8" x 13/16", extended keyway (date code E-9 & up)	1.25 **A**
15	1	BACH-25	Key, 1/8" x 1/8" x 1/2" (obsolete 6/99)	1.25 **A**
16	1	BAC-6-HYD-200-SS	Shaft, extended keyway, tang, ss (date Code E-9 & up)	155.62 **A**
16	1	BAC-6-HYD-SS	Shaft, 5/8" diameter, keyway & tang slot, ss (optional)	155.62 **A**
17	1	S300	Seal support spacer for 300 Series HYD motor 6/00	11.60 **A**
18	1	BAC-76-HYD	Coupling for hydraulic motor	33.60 **A**
19	1	BAC-75-HYD-304	Hydraulic motor, 11 GPM	991.01 **A**
20	4	41330	Cap screw, 5/16" NC x 3/4" hex head, motor to pump	0.75 **A**
		RK-FMC	Repair kit for FMC series pump	68.66 **A**
		RK-BAC-75-HYD-300	Repair kit for 304 motor	120.04 **A**
		RK-BAC-75-HYD-300-L	Repair kit for 300 Series -L motor	120.04 **A**

ACE HYDRAULIC MOTOR REPAIR PARTS

BAC-75-HYD-304
BAC-75-HYD-304L
BAC-75-HYD-310

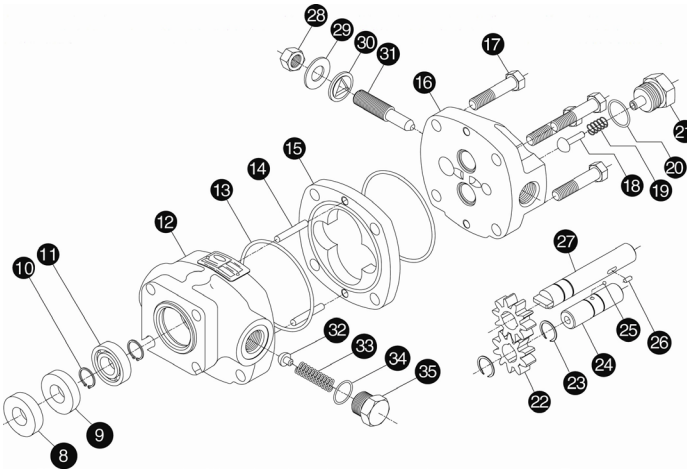

		MODEL	MODEL	MODEL	
		304	304L	310	
Ref #	Req'd	Part #	Part #	Part #	Description
1	1	43175			Retaining ring, shaft seal
2	1	43051		43051	Steel seal retainer
3	1	43141			"O"ring, seal retainer
4	1	43161		43160	Quad ring shaft seal
5	1	43125		43120	Collar, quad ring shaft seal
6	1	43151		43150	"O"ring, seal collar
7	1	43095		43090	Backup washer
8	1	S300	S300		Seal support spacer (L models)
9	1	40154	40154		Seal cartridge ("L" models)
10	1	43205	43205	43200	Retaining ring, bearing
11	2	43225	43225	43220	Ball bearing
12	1	43015	43015	43010	Drive plate
13	1	43130	43130	43130	"O"ring, housing seal
14	2	43085	43085	43080	Dowel pin, housing
15	1	43005	43005	43000	Gear housing
16	2	43020	43020	43020	End plate
17	1	43185	43185		Cap screw, 3/8" NC hex head
18	2	43210	43210	43210	Plunger, reverse flow check
19	1	43060	43060	43060	Spring, reverse flow check
20	1	43290	43290	43290	"O"ring, reverse flow check
21	1	43070	43070	43070	Valve cap, reverse flow check
22	1	43035	43035	43030	Gear housing
23	1	43240	43240	43240	Retaining ring, gear
24	1	43235	43235	43230	Idler shaft
25	1	43255	43255	43250	Ball, idler shaft
26	1	43195	43195	43190	Dowel pin, drive shaft
27	2	43045	43045		Drive shaft
28	2	43270	43270	43270	Hex nut, needle valve
29	1	43292	43292	43292	Backup washer, flat steel, needle valve
30	1	43291	43291	43291	1/2" thread seal, needle valve
31	1	43260	43260	43260	Adjusting screw, needle valve
32	1	43300	43300		Plunger, coasting check
33	1	43305	43305		Spring, coasting check
34	1	43310	43310		"O"ring, coasting check
35	1	43315	43315		Valve cap, coasting check
		41361		41379	Motor kit 310
		41362	41362		Motor kit 304L

(866)775-8089
FAX (701)775-8217

ACE HYDRAULIC MOTOR
REPAIR PARTS

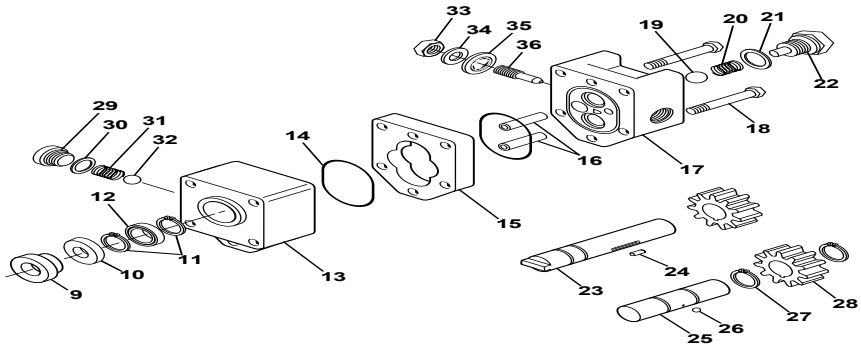

BAC-75-HYD-204
BAC-75-HYD-206
BAC-75-HYD-210

		MODEL 204	MODEL 206	MODEL 210	
Ref #	Req'd	Part #	Part #	Part #	Description
1	1	41890	41890	41890	Retaining ring, shaft seal
2	1	41770	41770	41770	Seal retainer, steel
* 3	1	41880	41880	41880	Quad ring shaft seal
4	1	41840	41840	41840	Collar, quad ring shaft seal
* 5	1	41870	41870	41870	O-ring, seal collar
* 6	1	41860	41860	41860	O-ring, seal retainer
7	1	41810	41810	41810	Backup washer, steel
8	1	41830	41830	41830	Bearing spacer, wire ring
9 **	1	S200	S200	S200	Seal support spacer (L models)
11	2	41941	41941	41941	Snap ring, bearing
12	1	41961	41961	41961	Ball bearing, 7/16" I.D.
13	1	41731	41731	41731	Drive plate
* 14 **	2	41850	41850	41850	O-ring, housing seal
15	1	41720	41721	41725	Gear housing
16	2	41800	41801	41805	Dowel pin, housing
17	1	41740	41740	41740	End plate
18	2	41900	41900	41905	Cap screw, 1/4" N.C. hex head
19	1	41950	41950	41950	Ball, reverse flow check
20	1	41780	41780	41780	Spring, reverse flow check
21	1	41820	41820	41820	Washer, nylon, reverse flow check
22	1	41790	41790	41790	Valve cap, reverse flow check
23	1	41761	41764	41766	Drive shaft
24	1	41920	41921	41925	Dowel pin, drive shaft
25	1	41970	41971	41975	Idler shaft
26	1	41990	41990	41990	Ball, idler shaft
27	2	41980	41980	41980	Retaining ring, idler gear
28	2	41750	41751	41755	Gear housing
29	1	42041	42041	42041	Valve cap, coasting check
* 30 **	1	42044	42044	42044	O-ring, coasting check
31	1	42042	42042	42042	Spring, coasting check
32	1	42043	42043	42043	Ball, coasting check
33	1	40960	40960	40960	Nut, 3/8" N.C. jam, needle valve
34	1	42040	42040	42040	Washer, flat steel, needle valve
* 35 **	1	42030	42030	42030	Thread seal, 3/8", needle valve
36	1	42010	42010	42010	Adjusting screw, needle valve
*		41371	41371	41371	Repair Kit, RK-BAC-75-HYD
**		41374	41374	41374	Repair Kit, RK-BAC-75-HYD-L

ACE HYDRAULIC PUMP REPAIR PARTS

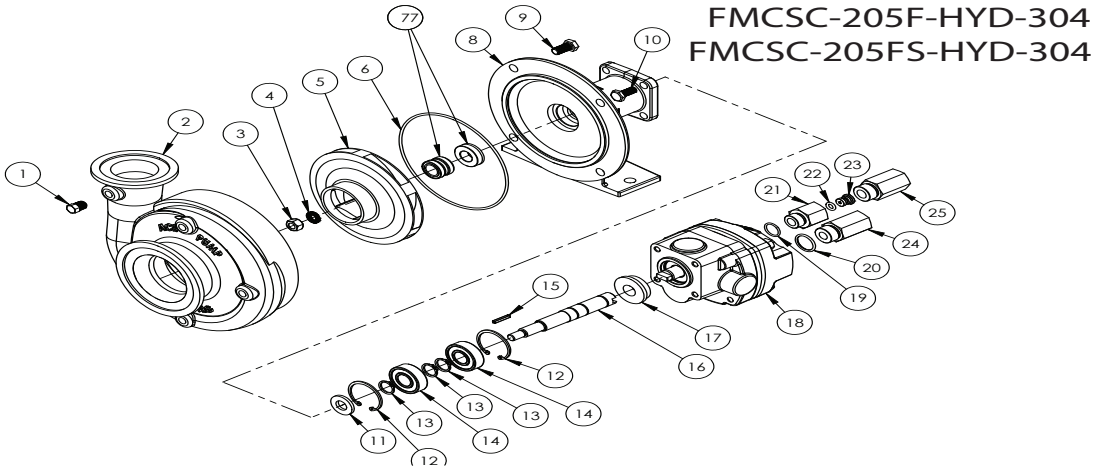

Ref #	Req'd	Part #	Description	Price
1	4	BAC-53	Pipe plug	0.75 **A**
1	4	41120	Pipe plug, stainless steel (-FS model)	5.92 **A**
2	1	7AC-14-FLG	Volute, 300 stanadard flange x220 FP flange, cast iron	517.46 **A**
2	1	7AC-14-FLG-SS	Volute, 300 flange x 220 flange, 316 stainless steel (-FS model)	1,009.48 **A**
3	1	BAC-23-B-SS	Nut, 3/8" NF, stainless steel	1.25 **A**
4	1	BAC-24-B-SS	Washer, 3/8", stainless steel, self-locking	8.16 **A**
5	1	BAC-26-200-P	Impeller, thermoplastic	154.62 **A**
5	1	BAC-26-200-CI	Impeller, cast iron (optional)	322.34 **A**
5	1	BAC-26-200-SS	Impeller, 316 stainless steel (-FS model) (optional)	440.16 **A**
6	1	BAC-4A	O-ring, body seal	9.14 **A**
7	1	BAC-7SC-205V	Seal, silicon carbide	199.32 **A**
8	1	BAC-14-205-HYD	Mounting frame for 205 pump	443.36 **A**
8	1	BAC-14-205-HYD-SS	Mounting frame for 205 pump, 316 stainless steel (-FS model)	1,066.30 **A**
9	4	40950	Cap screw, 3/8" NC x 3/4" hex head	0.75 **A**
9	4	40930	Cap screw, 3/8" NC x 3/4" hex head, stainless steel (-FS model)	2.72 **A**
10	4	41330	Cap screw, 5/16" NC x 3/4" hex head, motor to pump	0.98 **A**
11	1	BAC-54	Slinger	2.25 **A**
12	2	BACH-33	Snap ring, internal, BAC-14-205 mounting frame	1.75 **A**
13	3	BACH-32-HD	Snap ring, external, BAC-6-205 shaft	3.70 **A**
14	2	40880	Ball bearing, sealed, BAC-6-205 shaft	28.16 **A**
15	1	BAC-6-205-HYD-SS	Shaft, extended keyway, tang, stainless steel	236.38 **A**
16	1	BAC-25	Key, 1/8" x 1/8" x 3/16", extended keyway	1.25 **A**
17	1	S305	Seal support spacer for 205 series pump	18.52 **A**
18	1	BAC-75-HYD-304N	Hydraulic motor, 11 GPM, effective 5/13	978.34 **P**
19	1	41875	O-ring, #8 SAE fitting	1.25 **A**
20	1	41445	O-ring, #10 SAE fitting	1.25 **A**
21	1	BAC-80-8SAE	Body, restrictor orifice, #8SAE x 1/2" NPT	26.18 **A**
22	1	41448	O-ring, orifice insert	1.25 **A**
23	1	BAC-79-8	Orifice insert, restrictor insert, 0.125	13.34 **A**
24	1	BAC-78-10SAE	Reverse check assembly, #10 SAE x 1/2" NPT	36.06 **A**
25	1	LS-304N	Flow limiter (optional)	101.28 **A**
		RK-FMCSC-205	Repair kit for FMC-205 pump with silicon carbide shaft seal	210.20 **A**
		RK-BAC-75-HYD-300-L	Repair kit for 300 Series hydraulic motor	120.04 **A**

(866)775-8089
FAX (701)775-8217

ACE HYDRAULIC PUMP REPAIR PARTS

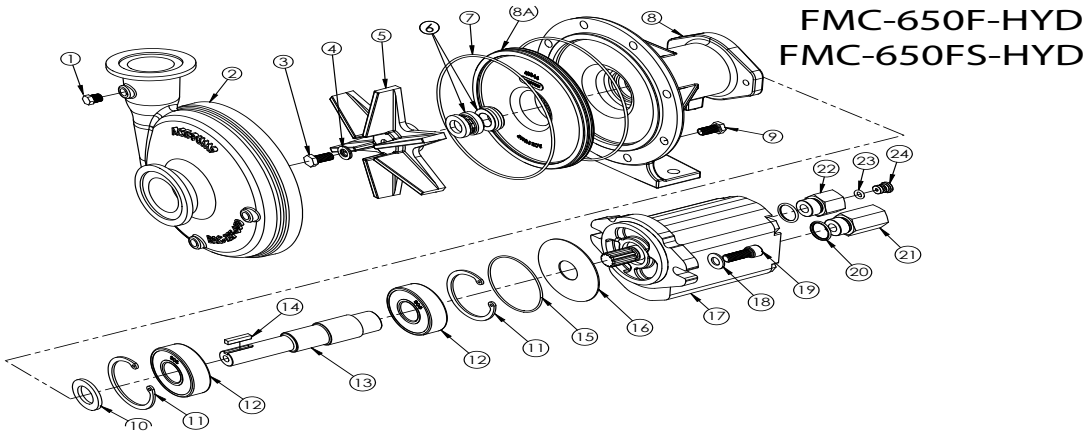

Ref #	Req'd	Part #	Description
1	3	BAC-53	Pipe plug, 1/8" NPT, hex head
1	3	41120	Pipe plug, 1/8" NPT, hex head, stainless steel (optional)
2	1	BAC-12-650-FLG	Volute, NPT & 220 flange x NPT & 200 flange (Fmodel)
2	1	BAC-12-650-FLG-SS	Volute, NPT & 220 x NPT & 200, 316 stainless steel (FS model)
3	1	40930	Cap screw, 3/8" NC x 3/4" hex head, stainless steel
4	1	30029	Washer, 3/8" O.D., sealing, stainless steel
5	1	BAC-26-650	Impeller, cast iron, e-coated
5	1	BAC-26-650-SS	Impeller, stainless steel (optional)
6	1	BAC-7-650	Seal, carbon/ceramic/Viton, 3/4"
6	1	BAC-7SC-650	Seal, silicon carbide/Viton, 3/4" (optional)
6	1	BAC-7-650B	Seal, carbon/ceramic/Buna N, 3/4" (for aqua ammonia)
7	1	BAC-4-150	O-ring, volute seal
8	1	BAC-14-650-HYD	Mounting frame, cast iron, e-coated
8	1	BAC-14-650-HYD-LIN	Mounting frome, cast iron, e-coated, for liner (FS model)
8A	1	BAC-16-650-LIN	Liner, 316 stainless steeel (FS model)
9	8	40950	Cap screw, 3/8" NC x 3/4" hex head
9	8	40930	Cap screw, 3/8" NC x 3/4" hex head, stainless steel (optional)
10	1	BAC-54-650	Slinger, 1.5" OD x 7/8" ID
11	2	41943	Snap ring, internal, mounting frame
12	2	40875	Bearing, FMC-650 models
13	1	BAC-6-650-HYD-SS	Shaft, 1.13" dia., 11T female spline, stainless steel
14	1	41085	Key, .188 x .188 x .875, FMC-650 models
15	1	43419	O-ring, flange, M Series (effective 6/15)
16	1	43414	Pad, absorbent, M Series (effective 6/15)
17	1	BAC-75-HYD-M16	Motor, hydraulic, pressure plated gear, 14.5 gpm
17	1	BAC-75-HYD-M16-CD	Motor, pressure plated gear, 14.5 gpm, case drain (optional)
18	2	42701	Washer, 3/8"
19	2	41907	Cap screw, 3/8" NC x 1", socket head
20	2	41445	O-ring, #10 SAE fitting
21	1	41442	Reverse check, #10 SAE male x 1/2" NPT female
22	1	41446	Body, adapter/restrictor, #10 SAE male x 1/2" NPT female
23	1	41448	O-ring, restrictor insert
24	1	BAC-79-8	Restrictor orifice insert, .125
		RK-FMC-650	Repair kit,carbon/ceramic/Viton seal, FMC-650 models
		RK-FMCSC-650	Repair kit, silicon carbide/Viton seal,FMC-650 models

ELECTRIC PUMPS

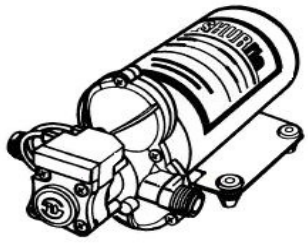

The High Performance SHURflo 2088 Series represents over 20 years of electric pump development, from the patented three chamber pump-head to its heavy duty motor and bearings. Count on the 2088 and the complete line of SHURflo pumps for long life, unmatched reliability and trouble free performance.

THE MODEL 2088 IS SELF-PRIMING TO 12 FEET & CAM BE RUN DRY WITH OUT DAMAGE.

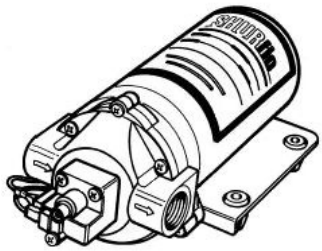

The SHURflo 8000 Series pump is ideal for the toughest industrial applications requiring high pressure with flow rates up to 1.8 GPM with low AMP draw. Available with valving in a wide variety of elastomers, the 8000 can accommodate a broad spectrum of chemical products. Count on the compact 8000 and the complete line of SHURflo pumps for long life, unmatched reliability and trouble free performance.

THE MODEL 8000 IS SELF-PRIMING TO 8 FEET & CAN BE RUN DRY WITHOUT DAMAGE.

SHURflo ELECTRIC DIAPHRAGM PUMPS MODELS 2088 & 8000						
		MAX			MAX AMP	
PART#	VOLTS	GPM	CONTROL	PORTS	DRAW	PRICE
2088-313-145	12-DC	3.6	Adj Demand Switch	1/2” MPT	6.0	404.11 R
2088-343-135	12-DC	2.9	Adj Demand Switch	1/2” MPT	10.8	246.04 R
2088-394-154	12-DC	3.2	Demand Switch	1/2” MPT	0.9	345.01 R
2088-514-144	12-DC	4.0	Adj Demand Switch	1/2” MPT	10.0	353.25 R
8000-543-236	12-DC	1.4	Adj Demand Switch	3/8” FPT	7.3	206.18 R
8000-543-250	12-DC	1.3	Internal Bypass	3/8” FPT	5.5	200.69 R
8000-543-290	12-DC	1.4	External Bypass w/1/4” FPT	3/8” NPT	6.8	207.55 R

SHURflo FITTINGS & STRAINERS		
PART#	DESCRIPTION	PRICE
8-154-01	SWIVEL WING NUT STRAIGHT 1/2” FPT X 5/8” BARB	1.83 **R**
8-156-01	SWIVEL WING NUT STRAIGHT 1/2” FPT X 3/4” BARB	12.26 **R**
8-161-01	SWIVEL WING NUT STRAIGHT 1/2” FPT X 1/2” BARB	2.44 **R**
8-162-01	SWIVEL WING NUT STRAIGHT 1/2” FPT X 3/8” BARB	10.99 **R**
8-157-01	SWIVEL WING NUT ELBOW 1/2” FPT X 3/4” BARB	5.90 **R**
8-155-01	SWIVEL WING NUT ELBOW 1/2” FPT X 5/8” BARB	1.83 **R**
8-158-01	SWIVEL WING NUT ELBOW 1/2” FPT X 1/2” BARB	2.13 **R**
8-159-01	SWIVEL WING NUT ELBOW 1/2” FPT X 3/8” BARB	2.13 **R**
8-034-01	SWIVEL HEXNUT ELBOW 1/2” FPT X 1/2” BARB	2.12 **R**
8-035-01	SWIVEL HEXNUT ELBOW 1/2” FPT X 1/2” MPT	4.87 **R**
8-060-01	SWIVEL HEXNUT ELBOW 1/2” FPT X 3/8” BARB	2.12 **R**

(866)775-8089
FAX (701)775-8217

ELECTRIC PUMP REPAIR PARTS

REF#	PART#	2088 PARTS KITS DESCRIPTION DIAPHRAGM/DRIVE KIT	PRICE
5	94-238-03	Santo 3.0 cam for all 2088	53.61 R
		VALVE KIT	
4	94-232-05	Poly/Viton for all 2088	78.05 R
		CHECK VALVE KIT	
2	94-237-05	Check valve kit, Viton for: 2088-313-145, 2088-343-135, 2088-394-154	35.39 R
		UPPER HOUSING WITH SWITCH KIT	
N/P	94-231-05	Viton 40-45 PSI adjustable (LP) for all Viton models w/Mini-Micro Switch	85.53 R
		SWITCH KIT	
1	94-230-36	Viton 40-45 PSI adjustable (LP) for: 2088-343-135, 2088-394-154	40.82 R
	94-230-55	Viton 40-45 PSI adjustable (splash proof) for: 2088-313-145	48.52 R
		UPPER HOUSING KIT	
3	94-231-30	Poly-Pro 1/2" MPT x 1/2" MPT for all listed 2088 except: 2088-343-170, 2088-343-500	22.96 R

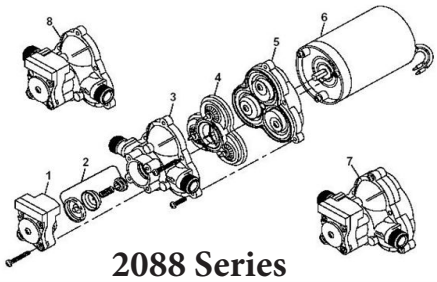

2088 Series

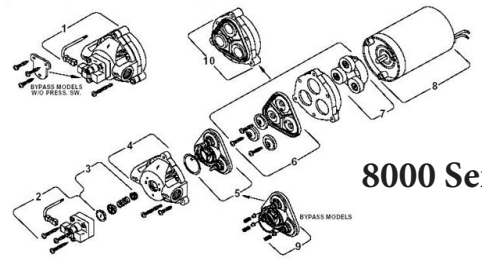

8000 Series

REF#	PART#	8000 PARTS KITS DESCRIPTION DRIVE ASSEMBLY KIT	PRICE
10	94-385-03	3.0 cam for all listed 8000 models except: 8000-033-236, 8000-541-236, 8000-343-236	37.17 R
		DIAPHRAGM KIT	
6	94-395-05	Viton for 8000-343-236, 8000-033-236	82.06 R
	94-395-06	Santoprene for all listed 8000 models except: 8000-343-236, 8000-033-236	30.02 R
		VALVE KIT	
5	94-390-05	Viton for all listed 8000 models except: 8000-543-250, 8007-543-250, 8000-533-250, 8000-542-296	59.57 R
9	94-391-09	Viton 45 PSI bypass for 8000-543-250, 8000-533-250	73.44 R
		CHECK VALVE KIT	
3	94-374-05	Viton, 1-way check valve for all listed 8000 models	17.99 R
		UPPER HOUSING	
1	94-378-00	Poly-Pro 1/2" male for 8000-543-136	27.36 R
	94-379-00	Poly-Pro 3/8" female for all listed 8000 models except: 8000-543-136	30.39 R
		SWITCH KIT	
2	94-375-05	Viton 60 PSI for all listed 8000 models except: 8000-543-250, 8007-543-250, 8000-533-250, 8000-543-290, 8000-543-328	49.54 R
	94-375-15	Viton 80-100 PSI for model 8000-543-238	52.35 R

EVERFLO AG PUMPS

EF1000

EF2200

EF3000, EF4000, EF5500, EF7000

12 VOLT DIAPHRAGM PUMP				
PART#	**GPM**	**PSIMax**	**PORT**	**PRICE**
EF1000	1	40	3/8” Barb	49.50 **R**
EF2200	2.2	70	3/8” NPT	93.75 **R**
EF3000	3	60	1/2” NPT	125.00 **R**
EF4000	4	60	1/2” NPT	146.00 **R**
EF5500	5.5	60	1/2” NPT	210.00 **R**
EF7000	7	60	1/2” NPT	360.00 **R**
12 VOLT DIAPHRAGM PUMP - QUICK ATTACH				
PART#	**GPM**	**PSIMax**	**PORT**	**PRICE**
EF2200QA	2.2	70	QA	97.25 **R**
EF3000QA	3	60	QA	123.75 **R**
EF4000QA	4	60	QA	148.50 **R**
EF5500QA	5.5	60	QA	214.75 **R**
EF7000QA	7	60	QA	360.00 **R**

QUICK ATTACH ENDS		
PART#	**DESCRIPTION**	**PRICE**
EFQCM12	QA x 1/2” MNPT	5.02 **D**
EFQCA38	QA x 3/8” Hose Barb	3.55 **D**
EFQCA12	QA x 1/2” Hose Barb	3.83 **D**
EFQCA34	QA x 3/4” Hose Barb	4.41 **D**
EFQCEL38	QA x 3/8” Hose Barb Elbow	4.24 **D**
EFQCEL12	QA x 1/2” Hose Barb Elbow	5.02 **D**
EFQCEL34	QA x 3/4” Hose Barb Elbow	8.40 **D**

EF2200QA

EF3000QA, EF4000QA EF5500QA

EF7000QA

EVERFLO REPLACEMENT PARTS					
	Replacement Head Kit				
PART#	EF2200-KIT	EF3000-KIT	EF4000-KIT	EF5500-KIT	EF7000-KIT
PRICE	65.85 **D**	88.47 **D**	103.53 **D**	150.66 **D**	162.25 **D**
	Replacement QA Head Kit				
PART#	EF2200QA-KIT	EF3000QA-KIT	EF4000QA-KIT	EF5500QA-KIT	EF7000QA-KIT
PRICE	57.62 **R**	76.74 **R**	90.64 **R**	132.58 **R**	134.13 **R**

CABLES		
PART#	**DESCRIPTION**	**PRICE**
WH-C	10’ On/Off Switch Assembly w/Alligator Clips and 2 Pin Connectors	21.00 **D**
WH-DCP	8’ On/Off Switch Assembly w/Fused DC Plug and 2 Pin Connector	21.00 **D**

Auto-Batch Herbicide Meter

DPAB-12E	(EPDM)	$934.40 **A**
DPAB-12V	(VITON)	$960.00 **A**
DPAB-15E	(EPDM)	$934.40 **A**
DPAB-15V	(VITON)	$960.00 **A**

* Select manual or automatic operation with the flip of a switch
* Optimized for repeatable batching;
  returns to last volume dispensed
* 100% moisture sealed circuity
* Dura-Meter with impact resistant Lexan faceplate
* 12 Volt or 110 Volt, and EPDM or Viton
* Measures in gallons, liters and ounces
* Includes a 2-year Warranty & Maintenance Program

SOTERA SYSTEMS

SS425B $1,250.91 **P**
12VDC
20' battery cable w/clips
30-amp fuse

SS470B $1,250.91 **P**
12VAC
6' 18AWG by
3-conductor
w/male type B end

IBC Bracket w/handle
Bottom tote connection fittings:
1" NPT street elbow, 1" Ball Valve, 2" to 1" reducing bushing,
2" female coupler w/female threads, all poly construction
EPDM Hose:
1" x 39' (suction), 1" x 12' (discharge), 2 - 90 degree flanges (inlet/outlet),
Anti Drip Spout, 1" Nozzle Valve w/tip, 2 Year Warranty

SOTERA SYSTEMS

CHEMICAL, HERBICIDE PUMPS

TOTE PUMP & GO KIT

FILL-RITE

The Most Versatile, Dependable Liquid Transfer Pump You Will Ever Need!

Includes:
Dip Tube, Suction Hose, Cam Lock, Hose Clamp, Discharge Hose, Pump and Battery Cable and Clamps

PART#	**SS415BX731PG**	**$902.72 P**	**12V**
PART#	**SS460BX731PG**	**$903.71 P**	**115V**

Pump Specifications:

Reciprocating, spring-driven, dual-diaphragm design

Flow Rates: Up to 15 GPM (1.5 CPS)
Up to 12 GPM (350 CPS)

Materials of Construction:

Pump - Glass filled polypropylene.
Internal Wetted Parts - Polypropylene, fluorocarbon and stainless steel.
Fluid Viscosities - up to 3000+ CPS
Inlet port - 1.0" FNPT
Outlet port - 1.0" FNPT
Particle tolerance - up to 0.1" diameter.

Motor Specifications:

Available in 12 Volt or 115 Volt
Thermal Overload Protection
1/4 HP 12 V draws 20 amps
1/4 HP 60 HZ (110 Volt AC)

Mounts directly to drums, containers, and storage tanks.

Full Season Pump Application!!

Motor Oil, Waste Oil, Hydraulic Fluid, Transmission Fluid, Soaps & Cleaning Fluids, Antifreeze, Propionic Hay, Seed Treament Liquids, Crop Protection Materials and Fertilizers.

Model SS415
Pump thick or thin chemicals
Up to 15 GPM
Battery cables & clips
Can pass particulates up to one tenth of an inch

Description:
Positive Displacement 12 volt DC powered Chemical diaphragm pump only.

Model SS417
Pump thick or thin chemicals
Up to 15 GPM
Battery cables & clips
Can pass particulates up to one tenth on an inch
Includes 12' discharge hose & nozzle/ball valve

Description: Complete series 700 pump with suction and discharge kit for application as a drum pump or barrel pump. Great for agriculture, industrial maintenance, material handling and car wash.

Model SS419X665
Pump thick or thin chemicals
Up to 15 GPM
Includes hoses & ball valve
Battery cables & clips
Can pass particulates up to one tenth on an inch

Description:
Positive Displacement 12 volt DC powered Chemical diaphragm pump system. Used to adapt to Monsanto keylock adapter.

Model SS445
Pump thick or thin chemicals
Up to 15 GPM
Integral Liquid recirculation
Includes 825 digital meter
Includes hoses, suction tubes, ball valve, battery cables & clips
Can pass particulates up to one tenth of an inch

Description: Basic 12 volt DC transfer pump with Santoprene® diaphragm, 20' battery cable, 1" x 12' EPDM hose, ball-valve nozzle, 825 digital meter, designed for liquid recirculation mixing only and GEM Cap tank mounting.

SOTERA SERIES 400 PUMPS		
PART#	**DESCRIPTION**	**PRICE**
SS415B	Pump ONLY	800.54 **P**
SS420B	Pump w/Hose, Nozzle & Tube	921.57 **P**
SS445B	Recirculation Pump w/Hose, Nozzle & Tube (GemCap Adapter & Digital Meter)	1,213.22 **P**
SS417B	Pump w/Hose, Nozzle & Tube (2" NPT or Buttress Opening)	845.18 **P**
SS419BX665	Pump w/Hose, Nozzle & Tube (Monsanto Keylock Adapter)	883.87 **P**

CHEMTRAVELLER® Pumps

The portability and flexibility of the Chemtraveller allows for top and bottom mount directly to drums, containers and storage tanks.

Model: SS435X713
Basic 12 Volt DC transfer pump only with complete top and bottom discharge kits. Provided a wide range of applications for drums, barrels, totes or IBCs.

Model: SS435
Basic 12 Volt DC transfer pump with Santoprene® diaphragms, 20' battery cable/battery clips, 1" x 14" EPDM discharge hose, 1" x 9' EPDM suction hose, ball valve nozzle, 825 digital meter and low profile tubular frame.

Model: SS465X713
Basic 115 Volt AC transfer pump with Santoprene® diaphragms, 1" x 14' EPDM discharge hose, 1" x 9' EPDM suction hose, ball valve nozzle, high profile tubular frame and wheel kit.

CHEMTRAVELLER PUMPS		
PART#	DESCRIPTION	PRICE
SS435BX713	12V PUMP KIT NO METER	1,275.71 **P**
SS465BX713	115V PUMP KIT W/METER	1,373.92 **P**

METERS

Model: 850
Description:
Pre-calibrated flowmeter, nutating disc, compact, durable, accurate and for use with many kinds of chemicals. Can be used at the pump or at the end of the hose. Added capability of air sensing. Will not register air.

Model: 825
Description: Pre-calibrated flowmeter, nutating disc, compact, durable, accurate and for use with many kinds of chemicals. Can be used at the pump or at the end of the hose.

SOTERA SYSTEMS FLOWMETERS						
PART#	DESCRIPTION	GPM	ACCURACY	CALIBRATE	INLET/ OFFLET	PRICE
FR-825	825 DIGITAL METER	2 TO20	+/- 0.5%	YES	1"	315.00 **Y**
FR-850	850 DIGITAL METER	2 TO 20	+/- 0.5%	YES	1"	400.00 **Y**

DRY DISCONNECT - PF SERIES		
PART#	DESCRIPTION	PRICE
DPCF100	Coupler - 1" FML x FPT Poly	173.00 **D**
PF-1002-32MP	Coupler - 1" Nipple x 2" NPT	39.00 **R**

CHEMICAL TRANSFER PUMPS & METER

DURA-ABS
AUTO-BATCH SYSTEM

How It Works

1 Select the volume desired
2 Press **START**
3 The pump will begin to dispense fluid and automaticallyshuts off when complete.

\ Intuitive interface allows for the selection of manual or automatic operation with the flip of a switch
\ High-flow pump with up to 15GPM flow rate
\ Optimized for repeatable batching; returns to the last volume amount dispensed
\ 100% moisture sealed circuitry
\ Includes Dura-Meter with impact resistant Lexan faceplate
\ Available in 12 Volt or 110 Volt, and EPDM or Viton options
\ 2 year warranty

PART#	DESCRIPTION	PRICE
DPABS-6318E-12	EPDM 12 Volt	1,710.00 **A**
DPABS-6318V-12	VITON 12 Volt	1,825.00 **A**
DPABS-6318E-110	EPDM 110 Volt	1,815.00 **A**
DPABS-6318V-110	VITON 110 Volt	1,910.00 **A**

The **DuraPump Easy-Caddy Frame Assembly** provides the ability to quickly attach the pump system to the frame of the IBC/cage tank. The system includes a 1" x 12' EPDM discharge hose, 1" x 18" EPDM suction hose, 2" cam lock, with hose barbs and hose clamps, and ball valve nozzle.

DPE-6018V-12 (Viton, 12V, without meter) $955.00 **A**
DPE-6018V-110 (Viton, 110V, without meter) $1,040.00 **A**

The **DuraPump top unload** configuration allows for the pump to be vertically threaded into a standard 2" NPT bung. Included is a telescoping dip tube, 1" x 12' EPDM discharge hose with hose barbs and hose clamps, ball valve nozzle.

DPT-6018V-12 (Viton, 12V, w/o meter) $857.60 **A**
DPT-6018V-110 (Viton, 110V, w/o meter) $940.80 **A**

The **DuraPump bottom unload** configuration allows for the pump to be mounted to the bottom 2" valve. Included is a 2" cam lock, 1" x 12' EPDM discharge hose with hose barbs and hose clamps, ball valve nozzle.

DPB-6018V-12 (Viton, 12V, without meter) $884.80 **A**

Dura-Meter

* Made of impact resistant Lexan faceplate
* 100% moisture-sealed circuitry makes meter impervious to water intrusion
* Menu driven backlit display
* Plumbed both for in-line and 90 degree applications
* Features 2 -year Warranty & Maintenance Program

DP-3000V (Viton) $371.20 **A**

DURA PRODUCTS

HIGH-FLOW DURA-METER NOW AVAILABLE IN 2” & 3”

* The High-Flow Dura-Meter is made of impact resistant Lexan faceplate. Made with 100% moisture-sealed circuitry, the meter is impervious to water intrusion.

* This High-Flow meter can be calibrated to achieve +/- 0.5& accuracy and significantly reduce Straight Inlet/Outlet requirements.

* The High-Flow Dura-Meter uses an industry leading menu driven backlit display. Plumbed both for in-line and 90 degree applications, adding to its versatility. 2” M220 manifold flanged meter body allows for multiple plumbing options.

* 2 Year Maintenance Program and warranty come standard.

DP-HFM2V (VITON) $1,340.80 A
DP-HFM3V (VITON) $1,633.60 A

Diaphragm Transfer Pump

DURA-PUMP PARTS			
Ref #	**PART #**	**DESCRIPTION**	**PRICE**
1	DP-P4002A	Upper Housing	31.32 **A**
	DP-P4012-M	12V Motor Assembly (#1 - #3)	537.25 **A**
	DP-P4015-M	110V Motor Assembly (#1 - #3)	653.60 **A**
4	DP-P4004AO-E	O-ring EPDM	15.63 **A**
4	DP-P4004AO-V	O-ring Viton	20.22 **A**
5	DP-P4017A-E	Cartridge Kit EPDM (#4 - #6)	370.72 **A**
5	DP-P4017A-V	Cartridge Kit Viton (#4 - #6)	394.90 **A**
6	DP-P4001AG-E	Bottom Gasket EPDM	22.05 **A**
6	DP-P4001AG-V	Bottom Gasket Viton	25.73 **A**
7	DP-H4001A-E	Bottom Housing EPDM	96.25 **A**
7	DP-H4001A-V	Bottom Housing Viton	108.50 **A**

DP-6018E-12 (12v, EPDM) $780.00 **A**
DP-6018V-12 (12v, Viton) $816.00 **A**

DP-6018E-110 (110v, EPDM) $865.00 **A**
DP-6018V-110 (110v, Viton) $897.60 **A**

The DuraPump is self priming, can be run dry without damage, has an internal bypass, and is easily field repairable. The DuraPump suction port is configured with a 2” Male NPT x 1” Female NPT for easy plumbing capabilities. The discharge port is a 1” Female NPT. The DuraPump features 2 year warranty.

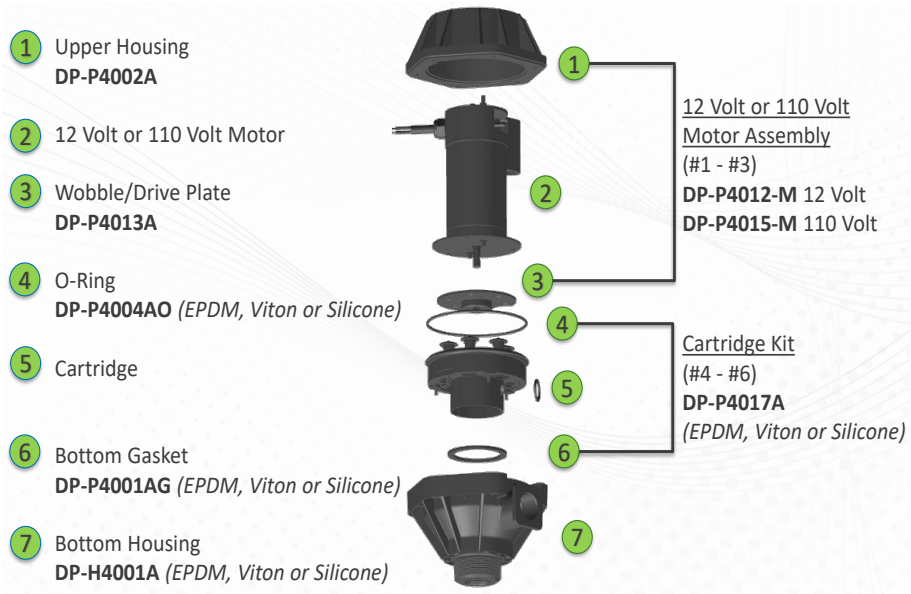

CHEMICAL, HERBICIDE PUMPS

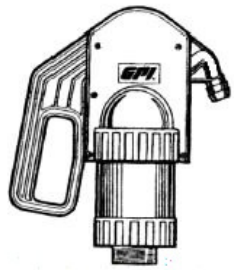

SINGLE ACTION PISTON HAND PUMP
DESIGNED FOR HERBICIDES, INSECTICIDES, FUNGICIDES & FERTILIZERS
POLYPROPYLENE AMND VITON WETTED PARTS
ADJUSTABLE SUCTION PIPE
ONE PINT PER STROKE
3/4" INLET & 1/2" ANTI-DRIP SPOUT WITH HOSE BARB
MOUNTS EASILY ON 55 GALLON BARREL OR TANK WITH 2" NPT THREADS

PART# LP-50H $123.25 A

12VDC MOTOR WITH LOW AMP DRAW OF 15-25 AMPS UNDER NORMAL CONDITIONS, LIGHTWEIGHT, DURABLE MOLDED PLASTIC HOUSING
DEPENDABLE ROTARY GEAR DESIGN
30 MINUTE DUTY CYCLE
INSTALLS ON 2" BUNG
HIGHLY PORTABLE WITH CARRYING HANDLE

PART# P-120H $1,132.74 A

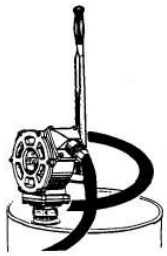

PUMP RATE TO 30 GPM, EASY-CHANGE STROKE SETTING (2 OR 1 QUART)
PUMPS WIDE VARIETY OF PRODUCTS, LIGHTWEIGHT ALUMINUM CONSTRUCTION, FITS CONTAINERS WITH 2" BUNG, VITON SEALS
HARDENED STEEL HANDLE, SPIN COLLAR FOR EASY INSTALLATION
AIR VALVE IN BODY TO PREVENT SIPHONING
BUILT-IN NOZZLE HOLDER
COMES WITH 40" SUCTION TUBE & 8' EPDM HOSE

PART# HP100-C $471.70 A

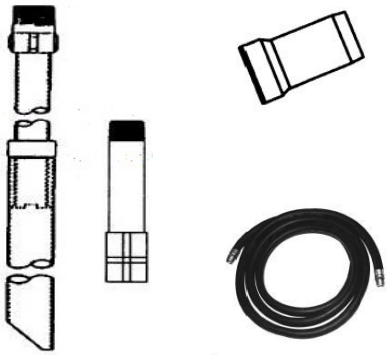

GPI ACCESSORIES		
PART#	DESCRIPTION	PRICE
110100-2	PLASTIC ADJUSTABLE DROP PIPE 22" TO 40"	45.59 **P**
F0236	ANIT-DRIP FOR BANJO NOZZLE	24.00 **Y**
F0237	ANTI-DRIP FOR NORWESCO NOZZLE	43.00 **Y**
110094-1	EPDM CHEMICAL RESISTANT HOSE ASSY 15'	47.04 **P**
CHEM1-12	EPDM HOSE ASSMY 1" x 12'	63.04 **R**

PLANTER MANIFOLDS
REBOUNDER SEED COVERS

PLMK12, 16 & PLMK24

Wilger style Planter Manifolds for application of starter fertilizer and chemicals.
12 row section shown, Kit includes: 2 or 4 "six row manifolds", orifices, 1/4" tubing for each row, 30' 1/2" supply hose, 1/4" push tube outlets.

MOUNTING HARDWARE NOT INCLUDED.

PART# PLMK12 $450.00 R
PART# PLMK16 $675.00 R
PART# PLMK24 $825.00 R

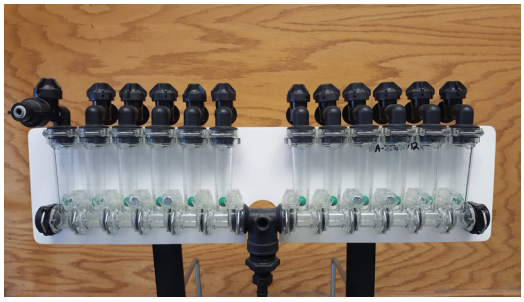

MOUNTING PLATES/LED LIGHTS

MOUNTING PLATE		
PART #	**DESCRIPTION**	**PRICE**
TA-H3706	6 Row for CDS-John Blue & Redball Flow Monitors	28.00 **NET**
TA-H3712	12 Row for CDS-John Blue & Redball Flow Monitors	43.00 **NET**
TA-IW3706	6 Row for Wilger Flow Monitors	32.50 **NET**
TA-IW3708	8 Row for Wilger Flow Monitors	38.50 **NET**
TA-IW3712	12 Row for Wilger Flow Monitors	49.50 **NET**
TA-IW3716	16 Row for Wilger Flow Monitors	58.50 **NET**
TA-IW3718	18 Row for Wilger Flow Monitors	65.50 **NET**
LED LIGHT STRIP		
PART #	**DESCRIPTION**	**PRICE**
TA-6RLED	6 Row LED Light Strip w/Plug	29.50 **NET**
TA-8RLED	8 Row LED Light Strip w/Plug	37.50 **NET**
TA-12RLED	12 Row LED Light Strip w/Plug	49.50 **NET**
TA-16RLED	16 Row LED Light Strip w/Plug	58.50 **NET**
TA-18RLED	18 Row LED Light Strip w/Plug	65.50 **NET**

REBOUNDER

REBOUNDERS & ACCESSORIES		
PART#	DESCRIPTION	PRICE
REB-02	Super Tough Orange JD	30.00 **NET**
REB-03	Y-Not Split Kit	6.75 **NET**
REB-04	Hose Holder Kit	6.00 **NET**
BCV6	Bullet Check Valve	6.75 **NET**
W	Wedge	3.00 **NET**

PLANTER PUMPS FOR FERTILIZER

EVERFLO DIAPHRAGM PUMP

5.5 GPM open flow
Motor: 12 VDC permanent magnet, totally enclosed, non-ventilated
Pump: 5 chamber positive displacement diaphragm pump, self priming, capable of being run dry, demand mode
Inlet/Outlet Ports:1/2" FNPT
PART# EF5500 $210.00 R

PLPK5.5M

Manual pump kit for application of starter fertilizers and chemicals.
Kit includes: 5.5 GPM pump, strainer, regulator, glycerin gauge, valve, all plumbing, 3/4" inlet, 1/2" outlet, mounting bracket, assembled as shown.
PART# PLPK5.3M $425.00 R

PLPK5.5E

Electric control pump kit for application of starter fertilizer and chemicals.
Kit includes: 5.5 GPM pump, strainer, valve, all plumbing, 3/4" inlet, 1/2" outlet, gauge tubing for remote gauge mounting bracket not included, assembled as shown. Need 3BEC control or other electric control.
PART# PLPK5.3E $375.00 R

MSC30-SSG

Electric Control for Planter Pumps.
25 amp motor control with stainless steel gauge, will work with all electric diaphragm pumps.
PART# MSC30-DD (Digital) **$600.00 R**

WILGER FLOW TUBES & PLANTER MANIFOLD KITS

Easy to see, visual indicator of liquid flow. If one of the "float balls" is lower than the others, there is a blockage. Individual columns clip together so you can gang as many or as few columns as you need. Exclusive O-ring seal and joint clip system is easy to assemble and service. Range of "float balls" lets you match to your flow rate. 3/8", 1/2" & 3/4" inlet and/or outlet fittings. 100 PSI maximum operating pressure. UV protected material stays clear.

PART#	DESCRIPTION	PRICE
20460-00	FLOW INDICATOR ASSEMBLY with BUNA-N O-RING	28.00 **D**
20460-02	BALL RETAINER	.87 **D**
20460-03	O-RING BUNA-N #212	.40 **D**
20460-04	LOCK U-CLIP, 302SS	2.11 **D**
20460-05	BALL-FLOW INDICATOR - 1/2", 302SS	2.13 **D**
20460-06	BALL-FLOW INDICATOR - MAROON GLASS	1.02 **D**
20460-07	BALL-FLOW INDICATOR - RED CELCON	1.02 **D**
20460-08	BALL-FLOW INDICATOR - GREEN POLYPRO	1.02 **D**
20460-10	BALL-FLOW INDICATOR - 7/16", 302SS	2.30 **D**
20460-13	BALL-FLOW INDICATOR - ORANGE POLYPRO	1.02 **D**
20501-00	ORS x HOSE SHANK - STRAIGHT - 3/8"	3.75 **D**
20502-00	ORS x HOSE SHANK - STRAIGHT - 1/2"	3.75 **D**
20503-00	ORS x HOSE SHANK - STRAIGHT - 3/4"	3.75 **D**
20511-00	ORS x HOSE SHANK - 90 DEGREE - 3/8"	3.75 **D**
20512-00	ORS x HOSE SHANK - 90 DEGREE - 1/2"	3.75 **D**
20513-00	ORS x HOSE SHANK - 90 DEGREE - 3/4"	3.75 **D**
20516-00	ORS MALE x 1/4" PUSH-IN TUBE - 90 DEGREE	6.69 **D**
20517-00	ORS MALE x 3/8" PUSH-IN TUBE - 90 DEGREE	7.39 **D**
20518-00	ORS MALE x 1/4" NPF 90 DEGREE	3.75 **D**
20519-00	ORS MALE x 1/4" NPFT	3.75 **D**
20520-00	ORS MALE x ORS FEMALE - 90 DEGREE	7.95 **D**
20521-00	ORS CAP	4.41 **D**
20523-00	ORS MALE x ORS FEMALE x 3/8" NPTF - ISOLATOR TEE	8.37 **D**
20524-00	ORS MALE x ORS FEMALE x 3/8" NPTF - TEE	8.37 **D**
20525-00	ORS MALE x ORS MALE x 1" NPTF FE - TEE	10.01 **D**
20526-00	ORS MALE x ORS MALE x ORS FEMALE - TEE with 1/4" NPTF PORT	10.01 **D**
21000-00	ORIFICE INSERT ASSY BLANK with SEAL	.96 **D**
21025-01	ORIFICE INSERT ASSY - 0.025" DIA with SEAL	4.75 **D**
21055-01	ORIFICE INSERT ASSY - 0.055" DIA with SEAL	4.75 **D**
21070-01	ORIFICE INSERT ASSY - 0.070" DIA with SEAL	4.75 **D**
21104-01	ORIFICE INSERT ASSY - 0.104" DIA with SEAL	4.75 **D**
21250-01	ORIFICE INSERT ASSY - 0.250" DIA with SEAL	4.75 **D**

Flow Indicator Ball & Metering Orifice Flow Chart

1 Calculate the flow rate required with this formula;

$$\text{GPM} = \frac{\text{GPA x MPH x Nozzle Spacing in inches}}{5940}$$

2 Combine the flow rates of all nozzles connected to a column.

3 For solutions other than water, find the conversion factor for the weight of the solution in the chart.

4 Multiply the calculated GPM by the conversion factor from the chart.

5 Find the ball and metering orifice for the flow in the charts.

Conversion Factor Chart

Weight lbs/gallon	7.00	8.34 Water	9.00	10.00	10.65	11.00	12.00	14.00
Specific Gravity	0.64	1.00	1.08	1.20	1.28	1.32	1.44	1.68
Conversion Factor	0.92	1.00	1.04	1.10	1.13	1.15	1.20	1.30

Flow Ball Chart		Flow Range per Column	
PART#	Ball	From	To
20460-08	Green Polypro	0.05	0.18
20460-07	Red Celcon	0.09	0.30
20460-06	Maroon Glass	0.31	0.72
20460-05	1/2" SS	0.40	1.33
20460-10	7/16" SS	1.00	2.70

Flow Metering Orifice Insert Chart

Part Number Code: 3 Numbers Following 21 Are Orifice Size in 0.000"; -00 for Buna, -V0 Viton

To install metering orifice, remove ball retainer, insert O'ring end of orifice into ORSM end on outlet fitting.

	Pressure PSI					
PART#	5	10	15	20	30	40
21009-XX	0.004	0.005	0.006	0.007	0.009	0.01
21011-XX	0.006	0.008	0.01	0.011	0.014	0.016
21013-XX	0.008	0.011	0.013	0.016	0.019	0.022
21015-XX	0.010	0.014	0.018	0.02	0.025	0.029
21018-XX	0.015	0.021	0.025	0.029	0.036	0.042
21020-XX	0.016	0.026	0.032	0.037	0.045	0.052
21022-XX	0.022	0.031	0.037	0.043	0.053	0.061
21025-XX	0.028	0.039	0.048	0.056	0.068	0.079
21028-XX	0.035	0.049	0.06	0.069	0.085	0.098
21031-XX	0.043	0.061	0.075	0.087	0.11	0.12
21034-XX	0.052	0.073	0.09	0.10	0.13	0.15
21037-XX	0.061	0.086	0.11	0.12	0.15	0.17
21040-XX	0.072	0.10	0.13	0.14	0.18	0.20
21043-XX	0.082	0.12	0.14	0.16	0.20	0.23
21046-XX	0.095	0.13	0.16	0.19	0.23	0.27
21049-XX	0.10	0.15	0.18	0.21	0.26	0.29
21052-XX	0.12	0.17	0.21	0.24	0.29	0.33
21055-XX	0.13	0.19	0.23	0.27	0.33	0.38
21057-XX	0.14	0.20	0.24	0.26	0.35	0.40
21060-XX	0.16	0.22	0.27	0.32	0.39	0.45
21063-XX	0.17	0.25	0.30	0.35	0.43	0.49
21067-XX	0.20	0.28	0.34	0.39	0.48	0.56
21070-XX	0.22	0.31	0.37	0.43	0.53	0.61
21073-XX	0.23	0.33	0.40	0.47	0.57	0.66
21075-XX	0.25	0.35	0.42	0.49	0.60	0.69
21078-XX	0.27	0.39	0.47	0.54	0.67	0.77
21081-XX	0.29	0.41	0.50	0.58	0.71	0.82
21086-XX	0.33	0.47	0.57	0.68	0.81	0.94
21089-XX	0.35	0.49	0.60	0.69	0.85	0.98
21091-XX	0.37	0.52	0.64	0.74	0.91	1.05
21093-XX	0.39	0.55	0.67	0.77	0.95	1.09

	Pressure PSI					
PART#	5	10	15	20	30	40
21104-XX	0.48	0.68	0.83	0.96	1.17	1.35
21107-XX	0.52	0.73	0.90	1.04	1.27	1.47
21110-XX	0.55	0.77	0.95	1.09	1.34	1.55
21113-XX	0.58	0.82	1.01	1.16	1.42	1.64
21116-XX	0.61	0.86	1.05	1.22	1.49	1.72
21120-XX	0.63	0.89	1.09	1.26	1.54	1.78
21125-XX	0.69	0.98	1.20	1.39	1.70	1.96
21128-XX	0.72	1.02	1.25	1.45	1.77	2.04
21132-XX	0.78	1.10	1.34	1.55	1.90	2.19
21136-XX	0.84	1.19	1.46	1.68	2.06	2.38
21140-XX	0.89	1.26	1.55	1.79	2.19	2.53
21144-XX	0.93	1.31	1.61	1.85	2.27	2.62
21147-XX	0.95	1.35	1.65	1.90	2.33	2.69
21150-XX	1.02	1.44	1.77	2.04	2.50	2.89
21152-XX	1.05	1.49	1.82	2.10	2.58	2.98
21156-XX	1.10	1.55	1.90	2.20	2.69	3.11
21161-XX	1.16	1.63	2.00	2.31	2.83	3.27
21166-XX	1.21	1.71	2.10	2.42	2.97	3.43
21171-XX	1.33	1.88	2.30	2.66	3.26	3.76
21177-XX	1.41	2.00	2.45	2.83	3.46	4.00
21182-XX	1.47	2.08	2.55	2.95	3.61	4.17
21187-XX	1.56	2.21	2.70	3.12	3.82	4.41
21196-XX	1.73	2.45	3.00	3.46	4.24	4.90
21205-XX	1.87	2.85	3.25	3.75	4.59	5.30
21213-XX	2.02	2.85	3.49	4.03	4.94	5.70
21218-XX	2.11	2.98	3.65	4.21	5.16	5.96
21234-XX	2.45	3.47	4.25	4.61	6.01	6.94
21250-XX	2.83	4.00	4.90	5.86	5.93	8.00

MICRO MATIC COMPONENTS

MACRO VALVE COUPLERS ELIMINATE CONTAINER RINSING AND DISPOSAL.
THE EFFICIENT, CLOSED SYSTEM MINIMIZES EXPOSURE IN LIQUID TRANSFER SYSTEMS.

MACRO VALVE

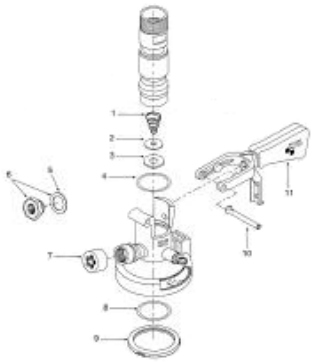

PART#	DESCRIPTION	PRICE
724-065	VALVE **Viton** SEALS	374.75 **P**
724-067	VALVE **EPDM** SEALS	366.86 **P**

REF#	PART#	DECSRIPTION	PRICE
1	100-615	NVR Spring	7.35 **P**
2	724-320	NVR Spring Retainer	15.92 **P**
3	102-525	Probe Seal ***EPDM***	6.01 **P**
3	102-875	Probe Seal ***Viton***	12.06 **P**
4	102-746	O-ring ***EPDM***	4.08 **P**
4	102-872	O-ring ***Viton***	5.75 **P**
5	102-848	Washer, Nylon	1.35 **P**
6	724-106	Thread Adapter Kit	13.25 **P**
7	102-553	Main Gasket ***EPDM***	21.30 **P**
7	102-874	Main Gasket ***Viton***	33.47 **P**
8	724-131	PRV Assy. ***EPDM***	32.60 **P**
8	724-133	PRV Assy. ***Viton***	36.15 **P**
9	724-102	Handle Hinge Pin	7.35 **P**
10	748-100	Pull Handle Assy.	76.63 **P**
	3062MB	SEAL KIT ***EPDM***	34.00 **Y**
	3063MB	SEAL KIT ***Viton***	57.00 **Y**

ACCESSORIES

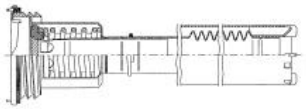

PART#	DESCRIPTION	PRICE
743-007	2" BSP, **EPDM** (fine)	58.45 **P**
743-008	2" BSP, **Viton (fine)**	63.92 **P**
743-086	2.5" x 5 Buttress, **EPDM**	58.45 **P**
743-087	2.5" x 5 Buttress, **Viton**	63.92 **P**

MOUNTING BRACKET
PART# CC2302
PRICE: $56.91 P

RINSING SOCKET, EPDM
PART# CC2511
PRICE: $115.89 P

RINSING SOCKET, EPDM
PART# CC2301
PRICE: $159.99 P

FLEX TUBE ASSY
PART# 743-203
PRICE: $8.00 P

DRUM VALVE

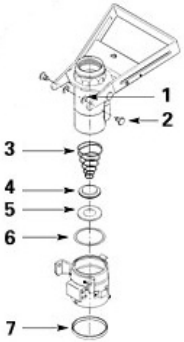

DRUM VALVES		
PART#	DESCRIPTION	PRICE
5073	VALVE VITON SEALS	187.20 **P**
744-002	VALVE EPDM SEALS	177.65 **P**
744-003	VALVE VITON SEALS	187.20 **P**

REF#	PART#	DESCRIPTION	PRICE
1	101-753	Retaining Ring	2.41 **P**
2	744-319	Grooved Handle Pin	3.82 **P**
3	100-031	Dry Break Spring	2.43 **P**
4	744-314	Dry Break Insert	6.48 **P**
5	102-073	Probe Seal ***EPDM***	3.82 **P**
5	102-074	Probe Seal ***Viton***	14.00 **P**
6	102-061	Body O-ring ***EPDM***	3.80 **P**
6	102-062	Body O-ring ***Viton***	7.51 **P**
7	102-067	Main Gasket ***EPDM***	8.28 **P**
7	102-068	Main Gasket ***Viton***	12.60 **P**
	3080DV	Seal Kit	39.54 **P**

SAFETY EQUIPMENT

DECONTAMINATION KIT

WSK-28
1 Draw String Bag
1 Gallon Water Bottle
1 16oz Eyewash Bottle
1 Tyvek Suit
1 Pair Tyvek Booties
1 Pair 224 Chemical Gloves
Towels
4oz Liquid Suds Soap

$48.00 NET

CHEMICAL GLOVES

PART#	SIZE	PRICE
37-145-10	10 - 13”	3.75 **P**
37-145-11	11 - 13”	3.75 **P**
37-165-10	10 - 15”	14.00 **P**
37-165-11	11 - 15”	14.00 **P**

TYVEK COVERALLS

DISPOSABLE COVERALLS MADE OF DUPONT TYVEK MATERIAL FOR DURABILITY, ECONOMY AND PRACTICALITY.FULL CUT FOR COMFORT WITH FULL LENGTH ZIPPER AND SHIRT COLLAR.

PART#	SIZE	PRICE
C-XL	XL	13.00 **P**
C-XXL	XXL	13.00 **P**
C-XXXL	XXXL	15.00 **P**
C-XXXXL	XXXXL	15.00 **P**

NITRILE GLOVES

$36.00 P

PART# DT120-M
PART# DT120-L
PART# DT120-XL
PART# DT120-XXL

NITRILE GLOVES

$28.00 P

PART# RAVEN-M
PART# RAVEN-L
PART# RAVEN-XL
PART# RAVEN-XXL

FOGLESS SOFTSIDE GOGGLES

PART# 552F $8.00 P

NH3 GLOVE

PART# C85 $8.00 P
PART# C85HD $13.50 P
(HEAVY DUTY)

MECHANIC GLOVES

PART# MC18-L $14.00 P
PART# MC18-XL $14.00 P

MECHANIC GLOVES DEERSKIN

PART# MCD22-L $30.00 P
PART# MCD22-XL $30.00 P

SURVIVAIR DUAL CARTIDGE RESPIRATOR

DURABLE SILICONE FACEPIECE GUARANTEED TO WITHSTAND FIVE YEARS OF WASHING NEW, IMPROVED YOKE AND HEAD HARNESS DESIGN REDUCES FACEPIECE SLIPPAGE, UNIQUE SLIDING ADJUSTMENT SYSTEM ON HEAD HARNESS KEEPS LOOSE STRAPS SECURE AND OUT OF WEARER’S VISION.

PART#	DESCRIPTION	PRICE
53P71-LAR	RESPIRATOR	53.00 **P**

MISCELLANEOUS

PART# JETRINSE $50.00 R

JET RINSE

THE JET RINSE NOZZLE ELIMINATES TRIPLE RINSING OF CHEMICAL CONTAINERS. USE IT ON METAL OR PLASTIC CONTAINERS. THE NOZZLE DIRECTS WATER IN SEVERAL DIRECTIONS TO PROPERLY RINSE THE CONTAINER. CONTAINER RESIDUES THEN GO DIRECTLY INTO THE SPRAY TANK.

TIP CLEANING BRUSH

PART# CP20016-NY $13.63 V

CALIBRATION CONTAINER

PART# CP24034-PP $61.44 V
PART# FJ025 (8.5OZ) $ 7.00 A
PART# FJ100 (32OZ) $ 10.00 A
PART# FJ200 (64OZ) $12.50 A
PART# FJ300 (128OZ) $17.50 A

DENSITY SCALE

PART# FE8000 $80.08 P
PART# FE8888 $35.61 P

HOSE CUTTER

PART#	DESCRIPTION	PRICE
KCSS200	Large Hose Cutter	29.41 **Y**
SSB200	Blade Large Cutter	11.27 **Y**
KCT100	Small Hose Cutter	23.79 **Y**
B8983	Blade Small Cutter	9.06 **Y**

CABLE TIES			
Part#	Size	Qty	Price
B7S0C	8”	100	6.00 **D**
B11S0C	11”	100	9.63 **D**
B14S0C	14”	100	13.75 **D**
B24H0L	24”	50	28.88 **D**
B36H0L	36”	50	36.58 **D**

TUBE CUTTER

PART#	DESCRIPTION	PRICE
44103218	Tube Cutter	12.63 **Y**
44103219	ReplacementBlade	3.72 **Y**

PLASTIC HOSE CLAMPS

PLASTIC HOSE CLAMPS							
Part#	Min Dia	Max Dia	Price	Part#	Min Dia	Max Dia	Price
HCP1	0.228	0.256	.59 S	HCP10	0.569	0.65	.69 **S**
HCP1.25	0.269	0.291	.63 S	HCP12	0.616	0.707	.63 **S**
HCP1.5	0.307	0.342	.69 S	HCP14	0.702	0.801	.69 **S**
HCP2	0.351	0.394	.69 S	HCP16	0.759	0.848	.69 **S**
HCP3	0.387	0.44	.61 S	HCP18	0.779	0.899	.69 **S**
HCP4	0.404	0.452	.69 S	HCP19	0.859	0.989	.68 **S**
HCP6	0.449	0.511	.72 S	HCP22	0.928	1.072	.72 **S**
HCP7	0.453	0.546	.72 S	HCP24	0.985	1.135	.72 **S**
HCP8	0.513	0.586	.72 S	HCP28	1.123	1.296	.72 **S**

FRESH CAB
BOTANICAL
RODENT REPELLENT
PART# FRESHCAB $15.00 NET

Simply place Fresh Cab pouches in enclosed areas and you are set.

For non-infested areas, place one pouch for every 125 sq. ft.

Scent lasts up to 90 days.

For infested areas, increase to 1 pouch per 8 sq. ft. and replace every 30 days.

Spray Advantage Windsock

PART# WINDSOCK $35.00 NET

KESTREL POCKET WIND METER

PART# 1000 $128.10 P

Accurate, rugged hand-held wind/airflow meter with large, replaceable impeller.

Measures and displays maximum, current and average wind speed in m/s, ft/min, km/h, kt, B on large, clear LCD.

Waterproof, floats, drop-tested to military standards.

Includes slip-on protective cover, neck lanyard, CR2032 coin cell battery and 5-year warranty.

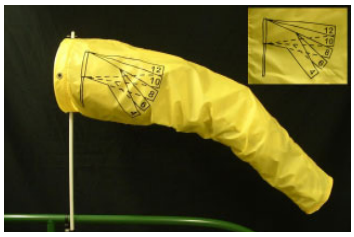

AGRICULTURAL WINDSOCK KIT

Calibrated to indicate wind-speeds from 2 to 12 miles per hour.
(windsock, fiberglass pole, hardware)

PART# AGW-100 $80.00 NET

Replacement Sock
PART# AGW-100R $60.00 NET

PART# 2000 $154.86 P

Accurate, rugged hand-held wind/airflow meter with large, replaceable impeller and responsive temperature sensor.

Measures and displays maximum, current and average wind speed, wind chill and air/snow/water temperature (F, C) on large, clear LCD.

Waterproof, floats, drop-tested to military standards.

Includes slip-on protective cover, neck lanyard, CR2032 coin cell battery and 5-year warranty.

WINDSOCK KIT
(windsock, 30" pole, brackets, hardware)

PART# AWCK-10 $110.00 NET

Replacement Sock
PART# AWCS10-36 $50.00 NET

GARDEN & HAND SPRAYERS

MASTER GARDENER -Rechargable Sprayer

FEATURES:

* Rechargable 12 Volt Battery
* 2 Hour Run Time on Single Charge
* Front Mounted Nozzle with 50" Swath
* 18' Vertical and 20' Horizontal Spray
* Includes Hitch Bar for Towing
* 12" Wheels
* 9 Gallon Tank
* Ideal for Applying Insecticides & Herbicides

PART# PS9 $275.00 P

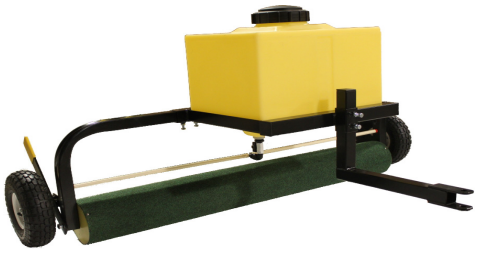

3', 4' & 6' Weed Roller

FEATURES:

* Full-Drain Tru-Kleen Tank
* Adjustable Hitch or Handle
* Direct application on plants
* Pneumatic transport tires
* Single master shut-off valve

PART# WR36 $408.00 Y
PART# WR48 $671.00 Y
PART# WR72 $960.00 Y

8.0 Liter Hand Sprayer

*Lightweight and Easy to Use
*Handle-Action Piston Pump
* Single Conical Spray Tip
* Large Mouth for Easy FIlling
* Pressure Relief Valve
* Ergonomic Handle

PART# HS-80 $32.00 D

1.2 Liter Hand Sprayer

*Lightweight and Easy to Use
*Handle-Action Piston Pump
* Single Conical Spray Tip
* Large Mouth for Easy FIlling
* Pressure Relief Valve
* Ergonomic Handle

PART# HS-12 $10.00 D

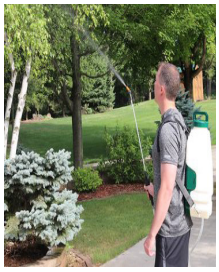

Red Weeder

* Safer than spraying
* Easier than hoeing
* No spray drift
* No overspray
* Wipe directly on weed

Replacement caps, gaskets and socks available.

PART# RW1 $45.00 Y

4 Gal BACKPACK Spot Sprayer

Rechargeable Lithium-Ion Backpack Sprayer - Revolt Series

Featuring:

No pumping - No Wires
Everflo 1.0 GPM Diaphragm Pump
Ajustable Shoulder Straps for Comfort
Enclosed Battery
Reach up to 18' vertically and 20' horizontally

BPS-REV401 $117.85 P

NICHOLS TILLAGE TOOLS

SPRING TILLAGE FAVORITES

Quick Change Field Cultivator Sweeps

UWQC7B - 1/4" x 7" Ultra wing shank
UWQC9B - 1/4" x 9"

Bolt on Field Cultivator Sweep

47UW7B7 - 1/4" x 7" ultra wing; 2 - 7/16" holes to fit 1-5/8"- 1-3/4" spacing
47UW9B7 - 1/4" x 9" ultra wing; 2 - 7/16" holes to fit 1-5/8"- 1-3/4" spacing

Double Ended Chisel for Field Cultivators

CC37 - 3/8" x 2" x 12"; 7/16" holes on 1-3/4" center

Spring Harrow Tines

16249 - Wilrich
235784 - Deere
R6000 - Salford

FALL TILLAGE FAVORITES

Double End Wrap Around Chisel

RA8 - 1/2" x 4" x 16"; 1/2" hole on 2-1/4" center
RA8HF - 1/2" x 4" x 16"; 1/2" hole on 2-1/4" center (hardfaced)

Twisted Chisel for Chisel Plow

483L-2 - twisted chisel for chisel plow
483R-2 - twisted chisel for chisel plow

Double End Chisel

HC2C8 - 5/8" x 2" x 17"; 1/2" hole on 2-1/4" center
HC2C1 - 1" x 2" x 17"; 1/2" hole on 2-1/4" center
H23-5 - 1-1/4" x 2-1/2" x 19"; 1/2" hole on 2-1/4" - 2-1/2" center

Single End Chisel

HS13CP - single end chisel

DUE TO THE VOLATILITY IN THE MARKET, PLEASE CALL FOR PRICE & AVAILABILITY.

Assemblies

PART# 3002A-1
CHEMICAL TANK MOUNT AIR REGULATOR
TO BE USED WITH PORTABLE AIR TANK OR CUSTOMER SUPPLIED AIR.

PART# 3050
TWIN AIR
USE WHEN OPERATING TWO CHEMICAL TANKS WITH ONE REGULATOR.

PART# 3017
INLINE LIQUID STRAINER
USE AS INLINE SCREEN TO FILTER OR MIX PRODUCTS.

PART# 3024MG
MACRO VALVE
MACRO COUPLER CAN BE USED WITH AIR PRESSURE OR PUMP (WHEN AIR FITTING OR REPLACED BY THE FILTER). COVERS MOST CHEMICALS. BE SURE TO MATCH THE COUPLER GASKET COLOR TO THE TANK EXTRACTOR GASKET COLOR.

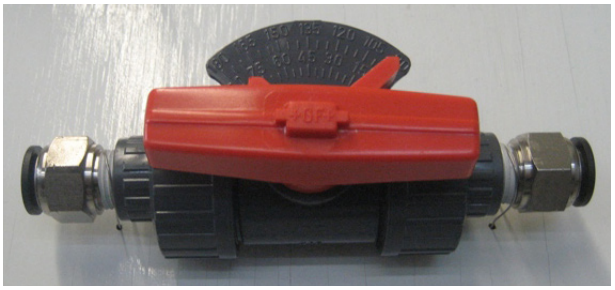

PART# 3012E (3/8”)
PART# 3012 (1/2”)
METERING BALL VALVE
USED TO ACCURATELY METER CHEMICAL INTO AUGER.

CALL FOR PRICING

TORPEDO HITCH

THE ANDERSON TORPEDO HITCH

MAKES HOOKING UP TO ANY EQUIPMENT:
* EASY
* SPEEDY
* EFFICIENT
* LABOR SAVING
* SAFE

AVAILABLE IN:
* 12VOLT ELECTRIC
* HYDRAULIC

HEAVY DUTY HYDRAULIC AND/OR ELECTRIC:
* FREE WHEEL
* 25' 5/16" AIRCRAFT CABLE

PART #	DESCRIPTION	PRICE
ATH-HE	12 VOLT ELECTRIC TORPEDO HITCH UNIVERSAL MOUNT	3,140.00 **NET**
60410100	TORPEDO HITCH HYDRAULIC 9000 LBS.	3,612.00 **NET**
76080	WIRELESS REMOTE WINCH ATH-HE	250.00 **NET**

NITRO-BAR

Nitro-Bars maximize your fetilizer investment! With every drop, you will increase yields and efficiency. Used with the Air Tram Tramline system, Nitro-Bars enable growers to accurately and uniformly apply nitrogen with unparalleled accuracy.

Highly Accurate
The simple and effective design allows each of the four ports to be fed independently, ensuring equal flow to each port.

Easy and Quick to Assemble
Easy setup to industry-standard 20-inch nozzle spacing on sprayers. They can be fitted to your sprayer in minutes!

Unaffected by Boom Height or Movement
The vertical stream produced means no overlapping pattern.

Reduced Risk of Leaf Burn
Fertilizer contact with the crop is minimized by the configuration of the Nitro-Bars and by the large droplets produced at the leaf surface. Fertilizer rolls off yhe foliage quickly, virtually eliminating the risk of leaf burn.

Adaptable for All Application Rates
Five color-coded, quick-fit adapters are available to encompass flow rates from 5 to 80 gallons per acre.

PART #	DESCRIPTION	PRICE
1040739	NITRO-BAR W/O-RING	12.00 **NET**
1040753	ADAPTER TEEJET (ORANGE)	6.00 **NET**
1040740	ADAPTER TEEJET (RED)	6.00 **NET**
1040741	ADAPTER TEEJET (BLUE)	6.00 **NET**
1040742	ADAPTER TEEJET (YELLOW)	6.00 **NET**
1040743	ADAPTER TEEJET (GREEN)	6.00 **NET**
1040744	ADAPTER HARDI (RED)	9.00 **NET**
1040749	ADAPTER HARDI (BLUE)	9.00 **NET**
1040750	ADAPTER HARDI (YELLOW)	9.00 **NET**
1040751	ADAPTER HARDI (GREEN)	9.00 **NET**
1040733	O-RING (FOR NITRO-BAR)	.70 **NET**

DEF TANKS, PUMPS HOSE, NOZZLES & ACCESSORIES

DEF Fuel Boss®

* **ANTI SPILL BREATHER**
  The leak-proof breather keeps Diesel Exhaust Fluid in and keeps dust out.

* **TRI LOCK SECURITY**
  DEF can be locked up and secure with provision to lock the fuel nozzle, fill point and PUMP SHIELD protection cover.

* **ANCHOR POINT STRAP GROOVES**
  Heavy-duty, never-fail strap grooves are built-in on both sides. This makes tying down this unit quick and hassle-free.

* **SELF ACTIVATE SHUT-OFF NOZZLE**
  This well-built DEF fuel nozzle is engineered to shut-off automatically when the machine is completely full.

* **PUMP SHIELD COVER**
  The pump & gun sits neat and tight out of the weather.

* **CORODE PROOF MATERIAL**
  Built with ISO 2224 compliant material, this tank will keep the DEF pure and eliminate engine damage.

* **IMPACT FLEX STRUCTURE**
  With sturdy side-walls, this workhorse is high-impact-resistant and virtually indestructible. Unlike steel or aluminum, it will consistently flex and bounce back.

* **BOLT FIX INSERTS**
  For a more permanent option, the four molded-in inserts in the base of the tank will keep this unit where you put it.

* **EASY LIFT HANDLES**
  Molded-in, solid handles make loading and unloading this uint effortless.

PART#	DESCRIPTION	DIMENSIONS	PRICE
REU025C09S	25 Gallon (Compact)	32” x 27” x 20”	1,805.00 **Y**
REU055C09S	55 Gallon (Compact)	32” x 27” x 30”	1,880.00 **Y**
REU075N09S	75 Gallon (Narrow)	51” x 21” x 31”	1,915.00 **Y**
REU100S09S	100 Gallon (Standard)	47” x 34” x 34”	2,025.00 **Y**

DEF DISCHARGE HOSE

PART#	DESCRIPTION	PRICE
DEF34	3/4” Hose (Bulk/Per Foot)	11.76 **A**

DEF DURA-METER

PART# DP-3000D $358.40 A

* 100% Moisture-sealed circuitry makes meter impervious to water intrusion
* Meter calibrated for DEF
* Same great menu driven backlit display
* Plumbed for both in-line and 90 degree applications
* ISO22241-3 Compliant for materials of construction
* Features 2 Year Service Warranty Plan
* Includes 2 Year Maintenance Program

Specifications:
* Operating Temp -10 degrees to 130 degrees F, -23 degrees to 54 degrees C
* Flow rate of 2 to 22 Gallons per Minute, 4 to 44 Liters per Minute
* Meter accuracy +/- 0.5%
* Maximum Pressure: 40 PSI
* Wetted materials include polypropylene, 304 Stainless Steel, Ryton, EPDM **Seals**

DEF TANKS, PUMPS HOSE, NOZZLES & ACCESSORIES

DEF Easy-Caddy

The DuraPump DEF Easy-Caddy Frame Assembly provides the ability to quickly attach the pump system to the frame of the IBC/cage tank. The system includes a 3/4" x 15' EPDM discharge hose, 3/4" x 18" EPDM suction hose, 2" cam lock, with hose barbs and hose clamps, and a manual dispensing nozzle.

MANUAL Nozzle		PRICE	AUTOMATIC Nozzle		PRICE
DEFE-6518ME-12	12 Volt	968.00 **A**	DEFE-6518AE-12	12 Volt	1,100.00 **A**
DEFE-6518ME-110	110 Volt	988.00 **A**	DEFE-6518AE-110	110 Volt	1,057.00 **A**
DEF Dura-Meter DP-3000D sold separately					
Includes a 2 Year Warranty & Maintenance Program					

DEF Top Unload

The DuraPump DEF Top Unload allows for the pump to be vertically threaded into a standard 2" NPT bung. Included is a telescoping dip tube, 3/4" x 12' EPDM discharge hose with hose barbs and hose clamps, and nozzle.

Without RSV Coupler					
MANUAL Nozzle		**PRICE**	**AUTOMATIC Nozzle**		**PRICE**
DEFT-6018ME-12	12 Volt	768.00 A	DEFT-6018AE-12	12 Volt	953.00 A
DEFT-6018ME-110	110 Volt	798.00 A	DEFT-6018AE-110	110 Volt	1,200.00 A

PUMP ONLY

* High-Flow pump with up to 15GPM free flow rate and 10+GPM with 3/4" discharge hose and nozzle
* Self-priming diaphragm pump with internal bypass
* Motor thermally protected from overheating
* 30 minute duty cycle
* Suction ports has 2" Male NPT and 1" Female NPT
* Pump is easily field serviceable
* 10 minute shut-off option available (110V only)
* Features 2 Year Service Warranty plan
* Includes 2 Year Maintenance Program

PART# DEF-6018E-12 12 Volt $801.60 A
PART# DEF-6018AS-110 110 Volt $744.00 A

DIESEL TANKS, PUMP HOSE, NOZZLES & ACCESSORIES

FEATURES:

* Tank manufactured from specifically formulated diesel grade polyethylene
* Strong poly lid to protect pump compartment
* Splash resistant breather installed
* 10 GPM pump with ON/OFF switch
* Bypass valve integrated in pump body
* 3/4" auto shut off nozzle
* Hose swivel to prevent tangles
* 15 feet of 3/4" hose with anti kink spring
* Easy clean suction strainer
* 3/4" drain bung on tank
* Nozzle lock plate

PART#	DESCRIPTION	DIMENSIONS	PRICE
RDU025C10D	25 Gallon	31" x 27" x 19"	1,150.00 **Y**
RDU055S10D	55 Gallon	48" x 34" x 21"	1,270.00 **Y**
RDU075N10D	75 Gallon	51" x 21" x 31"	1,345.00 **Y**
RDU100S10D	100 Gallon	48" x 34" x 31"	1,435.00 **Y**

FUEL TRANSFER HOSE

FEATURES:

* Designed for use w/12 or 110 Volt "Electric Pumps"
* Dispense Gasoline, Diesel Fuel and Kerosene
* High Quality Nitrile Tube
* Nitrile/PVC Blend Cover
* Braided Stainless Steel Static Wire is Embedded Between Hose Tube and Cove

PART#	SIZE	PRICE
FA34-12	3/4" x 12'	32.62 **P**
FA34-15	3/4" x 15'	38.78 **P**
FA34-20	3/4" x 20'	48.91 **P**
FA1-15	1" x 15'	56.98 **P**
FA1-20	1" x 20'	72.56 **P**

FUEL NOZZLES

PART#	DESCRIPTION	PRICE
DN100	Diesel Nozzle	85.58 **P**
GN34	Gas Nozzle	54.67 **P**
UN34	Unleaded Nozzle	54.67 **P**

FUEL TRANSFER PUMPS

Model: **FR1210G**
12V DC, 15 GPM heavy duty, cast-iron, rotary vane fuel transfer pump. Designed for gasoline, diesel, biodesel up to B20, E15, kerosene and mineral spirits. Includes pump, 3/4" manual nozzle, 3/4" x 12' hose with static ground wire, 18' battery cable, and 20"-34" steel telescoping suction pipe. UL/cUL, ATEX, CE motor. Two-year warranty.

Features & Benefits:
* Up to 15 GPM
* 1/4 HP motor
* UL/cUL listed motor
* Compatible with Diesel, Gasoline, Kerosene, E15, Biodiesel up to B20
* 2 year warranty
* 2" threaded base for tank mounting
* Heavy duty cast iron construction
* Cast bronze rotor with bronze rotary vanes
* Bulit-in strainer
* 12' hose with static wire
* Replaces FR1210C

Fill-Rite 12 Volt DC Transfer Pump		
PART#	**DESCRIPTION**	**PRICE**
FR1210H	Pump with manual nozzle	565.46 **P**

Well known FILL-RITE® fuel transfer pumps meet your stationary and mobile fuel transfer pump needs. See our full line of pumps to find the best pump for your needs.

Model: **FR4210G**
12V DC, 20GPM heavy duty, casts-iron, rotary vane fuel transfer pump. Designed for gasoline, diesel, biodesel up to B20, E15, kerosene and mineral spirits. Includes pump, 1" manual nozzle, 1" x 12' hose with static ground wire, 18' battery cable, and 20"-34" steel telescoping suction pipe. UL/cUL, ATEX, CE motor. Two-year warranty.

Features & Benefits:
* 20 GPM (76 LPM)
* UL listed motor
* Heavy duty cast iron
* Compatible with Diesel, Gasoline, Kerosene, E15, Biodiesel up to B20
* 2 year warranty
* 2" threaded base for tank mounting
* Heavy duty cast iron construction
* Cast bronze rotor with bronze rotary vanes
* Built-in strainer
* 1" x 12' fose with static wire
* Manual nozzle
* Replaces FR4210D

Fill-Rite 12 Volt DC Transfer Pump		
PART#	**DESCRIPTION**	**PRICE**
FR4210H	Pump with manual nozzle	692.90 **P**

NH3 TUBES & KNIVES

LINDSAY

FC-02

FORE USE BEHIND TILLAGE SPIKE OR SWEEP ON FIELD CULTIVATOR. 3/8" OD PINCHED AND DRILLED TUBE x 12" LONG. MOUNTING BRACKET HAS 9/16" HOLE PUNCHING WITH ADJUSTABLE HOLE CENTERS.

CP-02

FOR USE BEHIND TILLAGE SPIKE OR SWEEP ON CHISEL PLOW. 3/8" OD PINCHED AND DRILLED TUBE x 13" LONG. MOUNTING BRACKET HAD 9/16" HOLE PUNCHING WITH ADJUSTABLE HOLE CENTERS.

PART#	DESCRIPTION	PRICE
FC-02	3/8" CULTIVATOR	16.91 **P**
CP-02	3/8" CHISEL	21.11 **P**

SELF-CLEARING

PART#	DESCRIPTION	PRICE
CPI	CHISEL TUBE 3/8"	25.29 P
FCI	CULTIVATOR TUBE 3/8"	24.08 P
CPI-1	CHISEL TUBE 1/2"	23.15 P

CP65

HEAVY FOOTED KNIFE FOR CHISEL PLOW APPLICATION. 2" TOP WIDTH MATCHES TO SHANK. 1/2" OVERALL LENGTH. 1/2" HOLE PUNCHING, 2-1/4" TO 2-1/2" HOLE CENTERS. USE 1/2" x 2-1/2" HEX HEAD BOLTS.

PART#	DESCRIPTION	PRICE
CP65	CHISEL, PLAIN	54.81 **P**
CP65HS	CHISEL, HARDFACED	72.26 **P**
CP65-1/2	PLAIN W/1/2" TUBE	35.35 **P**
CP65HS-1/2	HARD SURFACED W/1/2" TUBE	63.49 **P**

CP70

THIN PROFILE TWISTED KNIFE FOR CHISEL PLOWS. 14" OVERALL LENGTH. 1/2" HOLE PUNCHING, 2-1/4" HOLE CENTERS. USE 1/2" x 2-1/2" HEX HEAD BOLTS.

PART#	DESCRIPTION	PRICE
CP70	TWISTED CHISEL, PLAIN	34.18 **P**
CP70HS	TWISTED CHISEL, HARDFACED	54.32 **P**
CP70-C14	TWISTED CHISEL, W/INSERT	59.75 **P**
CP70-1/2	PLAIN W/1/2" TUBE	35.11 **P**
CP70HS-1/2	HARD SURFACED W/1/2" TUBE	54.11 **P**

DT4

THIN PROFILE TWISTED KNIFE FOR FIELD CULTIVATORS. 11-1/2" OVERALL LENGTH. 7/16" HOLE PUNCHING, 1-5/8" TO 2" HOLE CENTERS. USE 7/16" x 1-3/4" HEX HEAD BOLTS.

PART#	DESCRIPTION	PRICE
DT4	TWISTED CULT, PLAIN	25.04 **P**
DT4HS	TWISTED CULT, HARDFACED	31.71 **P**
DT4-1/2	PLAIN W/1/2" TUBE	34.55 **P**
DT4HS-1/2	HARD SURFACE W/1/2" TUBE	46.15 **P**

DT3

DEVELOPED FOR 1-1/4" WIDE SHANKS ON FIELD CULTIVATORS 10-1/2" OVERALL LENGTH, 7/16" HOLE PUNCHING, 1-3/4" TO 2" HOLE CENTERS. USE 7/16" x 1-3/4" HEX HEAD BOLTS.

PART#	DESCRIPTION	PRICE
DT3	CULTIVATOR, PLAIN	26.79 **P**
DT3HS	CULTIVATOR, HARD SURFACED	43.03 **P**

VAPOR DUMP TUBE

USE ON SYSTEMS REQUIRING VAPOR DUMPING SUCH AS DICKEY-JOHN OR RAVEN NH3 SYSTEMS.

PART#	DESCRIPTION	PRICE
214-0002-002	RAVEN DUMP TUBE 3/4"	27.83 **A**

ACME COUPLINGS

PART #	MALE PIPE THREAD	ACME THREAD	LENGTH	MFG	PRICE
A-521-B	1”	1-3/4”	3-3/4”	CONTINENTAL	76.69 **P**
A-577D	1-1/4”	2-1/4”	4	SQUIBB	198.54 **P**

ACME SAFETY COUPLINGS

PART #	MALE PIPE THREAD	ACME THREAD	LENGTH	MFG	PRICE
A-1131-F	1”	1-3/4”	6”	SQUIBB	128.82 **P**
A-571-B	1”	1-3/4”	6”	CONTINENTAL	105.05 **P**
A-1132-F	1-1/4”	2-1/4”	6-3/4”	SQUIBB	247.21 **P**
A-577-C	1-1/4”	1-3/4”	6”	CONTINENTAL	181.13 **P**

MALE ACME X MALE NPT ADAPTER

PART #	DESCRIPTION	PRICE
ME521S-4	1 3/4” Male Acme x 1/2” MPT	118.95 **P**
ME215S	1 3/4” Male Acme x 3/4” MPT	51.33 **P**
A524B	1 3/4” Male Acme x 1” MPT	39.11 **P**
ME217S	1 3/4” Male Acme x 1 1/4” MPT	59.75 **P**
ME502S-16/10	2 1/4” Male Acme X 2” MPT	138.50 **P**
A2059	2 1/4” Male Acme x 1” MPT	196.46 **P**
A2060	2 1/4” Male Acme x 1 1/4” MPT	132.04 **P**

MALE ACME X FEMALE NPT ADAPTER

PART #	DESCRIPTION	PRICE
ME213S	1 3/4” Male Acme x 3/4” FPT	46.66 **P**
ME214S	1 3/4” Male Acme x 1” FPT	42.00 **P**
ME252S-16	3 1/4” Male Acme x 2” FPT	163.78 **P**
ME508S-24	3 1/4” Male Acme x 3” FPT	315.26 **P**

MALE ACME X MALE ACME ADAPTER

PART #	DECRIPTION	PRICE
A2005	1 3/4” Male Acme x 1 3/4” Male Acme	132.42 **P**
ME275S	2 1/4” Male Acme x 2 1/4” Male Acme	142.59 **P**
ME277S	3 1/4” Male Acme x 3 1/4” Male Acme	226.21 **P**

ADAPTER CAP

PART #	DESCRIPTION	PRICE
ME612S	3 1/4” Female Acme x 1 3/4” Male Acme	219.64 **P**
A582	2 1/4” Female Acme x 1 3/4” Male Acme	148.37 **P**

CAPS & CHAINS

PART #	DESCRIPTION	PRICE
ME431FS	Metal Cap 2 1/4” Acme	129.17 **P**
ME441FS	Metal Cap 3 1/4” Acme	186.52 **P**
ME229S-1	Metal Cap & Chain 1-3/4” Acme	81.20 **P**

PART #	DESCRIPTION	PRICE
A2080C	Dust Cap w/Chain for 1 3/4” Acme Thread Plastic	6.34 **P**

HOSE HANGER ADAPTER

CAUTION:
If useing as plug be certain that coupling & valve have been bled before removal.
Not leak proof.

PART #	DESCRIPTION	PRICE
A524WB	Parking Plug 1 3/4” Acme	69.23 **P**
A2024	Parking Plug 2 1/4” Acme	89.72 **P**

NH3 PARTS & ACCESSORIES

PIONEER BREAKAWAY COUPLERS

POPPET TYPE VALVES ASSURE POSITIVE SHUT-OFF. STEEL BODY MATERIAL, BUNA-N O-RING, POPPET SEAL IS NEOPRENE, CADIUM PLATED FINISH. UL APPROVED FOR ANHYDROUS AMMONIA IN ACCORDANCE WITH OSHA REGULATIONS. UL APPROVAL IS VOIDED IF COUPLER IS SERVICED OR REBUILT IN THE FIELD. MANUFACTURERS SUGGESTS REMOVAL AFTER 3 YEARS.

1” PIONEER BREAKAWAY COUPLER

INCLUDES ACME ADAPTER, BRACKET AND BLEEDER VALVE. BRACKET AND COUPLER CANNOT BE PURCHASED SEPARATELY. COUPLER WILL NOT FIT BRACKET PURCHASED BEFORE 1984.

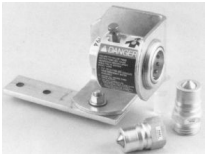

PART#	DESCRIPTION	PRICE
4500-6M	1” Coupler complete	747.85 **P**
4510-6M	1” Male Tip w/Acme	144.38 **P**
4503-7	1” Double Swivel Bracket	145.67 **P**

1-1/4” PIONEER BREAKAWAY COUPLER

PROVIDES MORE THAN 15% ADDITIONAL FLOW POTENTIAL COMPARED TO 1” COUPLER. CAN BE ADAPTED TO 1” ACME ADAPTER SEPARATELY. INCLUDES BRACKET AND BLEEDER VALVE. BRACKET AND COUPLER CANNOT BE PURCHASED SEPARATELY.

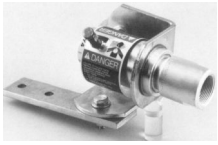

PART#	DESCRIPTION	PRICE
4500-7	1-1/4” Coupler Complete	811.51 **P**
4510-7B	1-1/4” MLT Tip x 1-1/4” FPT	221.11 **P**
4503-7	1-1/4” Double Swivel Bracket	145.67 **P**

4510-6 **4510-7B**

PART#	DESCRIPTION	PRICE
4510-6M	1” Male Tip w/Acme	144.38 **P**
4510-6	1” Male Tip w/FPT	112.21 **P**
4510-7B	1-1/4” Male Tip	221.11 **P**

3/4” VAPOR RELIEF

1-1/4” VAPOR RELIEF

PART#	DESCRIPTION	PRICE
A1301A	3/4” Vapro Relief Valve	90.28 **P**
A1310A	1-1/4” Vapor Relief Valve	347.08 **P**

VAPOR RELIEF VALVES ARE SAFETY VALVES DESIGNED TO OPEN WHEN TANK PRESSURE RISES ABOVE 250 PSI. USED ON APPLICATOR, STORAGE AND NURSE TANKS. RELIEF VALVES SHOULD BE REPLACED 5 YEARS AFTER THE DATE OF MANUFACTURE WHICH IS STAMPED ON THE VALVE.

A 1000 NEEDLE VALVE IS DESIGNED FOR USE IN AMMONIA TANKS TO PROVIDE A SHUT-OFF FOR THE PRESSURE GAUGE. ITS PURPOSE IS TO ALLOW THE OPERATOR TO REMOVE THE GAUGE FOR REPAIR OR REPLACEMENT WITHOUT EVACUATING THE TANK. IT CAN ALSO BE USED ON AN APPLICATOR TO SHUT-OFF THE FLOW TO ONE OR MORE KNIVES.

PART# A-1000 $135.80 P

THE A-1415 RELIEF MANIFOLD IS USED ON LARGE NH3 TANKS TO ALLOW REMOVAL OF A RELIEF VALVE FOR INSPECTION OR REPLACEMENT WITHOUT THE NEED OF EVACUATING THE TANK. ADEQUATE RELIEF PROTECTION IS PROVIDED BY THE REMAINING RELIEF VALVE IN THE MANIFOLD. BLEEDER VALVES RELIEVE VAPOR PRESSURE UNDER EACH RELIEF AFTER CLOSING THE MANIFOLD PORT AND EACH PORT CAN BE CLOSED SEPARATELY, MEETING CODE REQUIREMENTS.

PART# A-1415-A $2,269.11 P
PRICE INCLUDES (2) A1310A RELIEF VALVES

PART# A-1415 $1,574.95 P
MANIFOLD ONLY

THE BLEEDER VALVE HAS A T-HANDLE AND IS DESIGNED TO BLEED-OFF TRAPPED LIQUID OR VAPOR NH3 IN HOSE, VALVE COUPLINGS & PIPING. ALSO FOR INSTALLATION IN TANKS AN 85% LIQUID LEVEL GAUGE. A-410 IS THE SAME VALVE WITH A 12” DIP TUBE FACTORY INSTALLED.

PART#	DESCRIPTION	PRICE
A411	1/4” Bleed Valve	23.57 **P**
A410	1/4” Bleed Valve w/12” dip tube	48.95 **P**

HYDROSTATIC RELIEF VALVES ARE DESIGNED TO RELIEVE LIQUID PRESSURE IN VALVES, HOSES OR PIPING WHERE LIQUID MAY BE TRAPPED. PRESSURE SET AT 375 PSI. NOTE: ALL SAFETY RELIEF AND HYDROSTATIC VALVES MUST BE CHANGED 5 YEARS AFTER THE DATE OF MANUFACTURE.

PART# A400 $52.75 P

NH3 APPLICATION ACCESSORIES

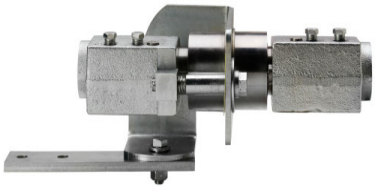

BREAK AWAY COUPLER			
PART#	**BRAND**	**DESCRIPTION**	**PRICE**
A-SWV-125	Continental	Fullport 1-1/4”	1,450.84 **P**
A-HFC-114	Continental	High Flow 1-1/4”	862.10 **P**
113028	Squib Taylor Flomax	High Flow 1-1/4”	1,376.92 **P**
4500-7	Pioneer	Standard 1-1/4”	811.51 **P**

MANIFOLD			
PART#	**BRAND**	**DESCRIPTION**	**PRICE**
A-MVD-B	Continental	Body - Manifold w/ 1” Hose Barb	239.82 **P**
MVD-R-16A120	Continental	Ring - 16 Outlet w/ 3/8” Med Flow Barb	192.40 **P**
MVD-R-16A201	Continental	Ring - 16 Outlet w/ 3/8” High Flow Barb	192.40 **P**
MVD-R-16B120	Continental	Ring - 16 Outlet w/ 1/2” Med Flow Barb	192.40 **P**
MVD-R-16B201	Continental	Ring - 16 Outlet w/ 1/2” High Flow Barb	192.40 **P**
IP-1300	John Blue	Impellicone - 13 Outlet (barbs not included)	541.45 **P**
IP-1800	John Blue	Impellicone - 18 Outlet (barbs not included)	696.15 **P**

SPLITTER			
PART#	**BRAND**	**DESCRIPTION**	**PRICE**
A1803	Squib Taylor	3 Outlet - 1” Full Port	504.40 **P**
A1806	Squib Taylor	4 Outlet - 1” Full Port	504.40 **P**
A1807	Squib Taylor	5 Outlet - 1” Full Port	509.16 **P**
A-360-SP-6	Continental	6 Outlet	891.84 **P**
IPS-4	John Blue	4 Outlet	549.78 **P**
IPS-6	John Blue	6 Outlet	585.48 **P**

MERIDIAN

SEED EXPRESS 375DX

FEATURES:

- 180° Swing-most variable conveyor available
- AutoConveyor™
- 6”-8” Conveyor with 8” Cleated Belt
- Variable speed Remote Control
- Uni-body design
- Self-filling conveyor
- Telescoping arm
- Independent Support Structure
- Bolt-on Hitches
- Quick Connect Conveyors

SEED EXPRESS 240BWT

FEATURES:

- 180° Swing-most variable conveyor available
- Ultimate Reach Conveyor™
- 8” Conveyor with 12” Cleated Belt
- Conveyor transfer volume estimated at 1500#/min
- Variable speed-control your flow
- Two separate compartments
- Rolled tarp
- 9 HP Electric start Honda gas engine
- Rubber lined hood
- Scale with digital readout

The Swing

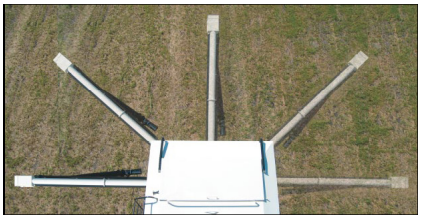

180 degree Swing gives you the most flexibility to fill your planter or drill from position left, right or rear.

The Speed

Low Speed/High Volume
We reached industry standard specs, set at 350 ft./min belt speed, with amazing flows of 900 lb/min.

The Gentleness

Cleated Belt Technology with gentle tapered cleats that conform to the tube gently carries the seed, with no roll back, rather than propelling it as traditional conveyors do.

CALL FOR SIZES & PRICING

(866)775-8089
FAX (701)775-8217

GRAIN STORM CARTS
1000, 1050, 1150 & 1325 BUSHEL CART

Single Flotation,
Walking Tandem Duals
or Tracks

FEATURES:

** AVAILABLE IN RED, GREEN OR BLUE
** PTO OR HYDRAULIC DRIVEN 20" OR 22" DIAMETER AUGER
** ADJUSTABLE AXLES
** HEAVY-DUTY SWIVEL HITCH
** FRONT-FOLDING CORNER AUGER
** GRAIN VIEWING WINDOW
** HAND WHEEL OPERATED CLEAN OUT DOOR
** FLASHER/TURN SIGNAL TAILLIGHTS & AUGER SPOTLIGHT
** OPTIONAL SCALE AVAILABLE
** OPTIONAL ROLL TARP

CALL FOR SIZES & PRICING

"Solving your in-field refueling needs"

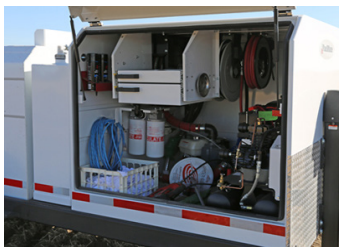

Economy Mobile Fuel Trailer

* Available in 500 & 990-gallon capacities
* Tanks internally baffled
* Trailer comes equipped with electric brakes, white spokes with radials, removable drop leg jack, safety chains, adjustable height hitch & all DOT lighting
* Choose between a 12-volt or gas powered fuel pump
* Optional 50-gallon DEF self-contained hitch mount system

Deluxe Mobile Fuel Trailer

* Available in 500, 750 & 990-gallon capacities
* Tanks internally baffled
* Deluxe trail comes standard with space to accommodate for DEF upgrade at future date
* Trailer comes equipped with one 54" cabinet with two bottom opening lockable doors, electric brakes, white mod with radials, removable drop leg jack, safety chains, adjustable height hitch & all DOT lighting
* Lockable cabinet to house one 25' x 1" diesel fuel reel with Huskey auto nozzle and high flow fuel swivel. One 5.5 HP Honda engine w/2" transfer pump w/double filter head and filters, capable of producing 40 GPM, high flow FR901 40 GPM mechanical meter with resettable accumulatorFlow rate totalizator to 99.9 GPM
* (1) 23" x 3" and (1) 23" x 5" deep drawer

CALL FOR PRICING

CONVEYORS & AUGERS

BELT CONVEYOR STANDARD FEATURES:

* THE UNITS FEATURE A DURABLE POWDER COAT FINISH, THE MAIN HOUSING FEATURES A GALVANIZED FINISH FOR MAXIMUM DURABILITY.
* CAPACITIES RANGE FROM 3,000 BPH TO 6,000 BPH DEPENDING ON ELEVATED ANGLE.
* BELT CONVEYOR SYSTEM PROVIDES GENTLE HANDLING AND HIGHER CAPACITY THAN THE SAME SIZE SCREW CONVEYOR.
* 10" DIAMETER GALVANIZED MAIN TUBE AVAILABLE IN 35', 60' AND 70' LENGTHS.
* LOW MAINTENANCE/LONG WEAR. ENGINEERED FOR LONG LASTING PERFORMANCE WITH HEAVY-DUTY TWO PLY 15" CRESENT TOP PVC BELTING WITH NYLON SLIDER BACK.
* BELT LIFE RATED AT 3,000 HOURS.
* LOW HORSEPOWER-UNIQUE DESIGN. REQUIRES ONLY HALF THE HORSE-POWER OF COMPARABLE LENGTH SCREW CONVEYORS, GREATLY REDUCING ENERGY CONSUMPTION.

BELT CONVEYOR

ROLL-AWAY HOPPER

WITH FLEX ANGLE

THE ROLL-AWAY HOPPER FROM MAYRATH IS DESIGNED FOR CONVENIENCE AND VERSATILITY. FOR FAST AND CONVENIENT UNLOADING, THE FLEX ANGLE ALLOWS THE INCLINE TUBE TO BE ADJUSTED TO REACH THE APPROPRIATE DISCHARGE HEIGHT. THIS ENABLES THE ROLL-AWAY HOPPER TO BE USED IN VARIOUS APPLICATIONS SUCH AS FEEDING PORTABLE AUGERS, CLEANERS OR ANYTHING TO DO WITH A HIGH INTAKE OR OTHERWISE LIMITED ACCESS. LOW CLEARANCE CAPABILITIES ALLOW FOR EASY PICKUP FROM HORIZONTAL BIN UNLOADERS, GRAVITY WAGONS, HOPPER BOTTOM SEMI-TRUCKS OR OTHER APPLICATIONS. WHEELS FOR THE HOPPER CAN BE POSITIONED ALLOWING FOR SIDE TO SIDE OR FORWARD MOVEMENT. SPECIAL LENGTH INCLINED SECTIONS MAY ALSO BE ORDERED. ALSO AVAILABLE WITH THE 10-1/2" LOW PROFILE HOPPER OPTION.
AVAILABLE IN 8", 10" AND 12" MODELS.
8" = 3,200 BPH, 10" = 4,500 BPH, 12" = 7,000 BPH

MAYRATH TD, TD-PLUS, IN-LINE & SWING-AWAY AUGERS

IN-LINE DRIVE

THE TD & TD-PLUS MAYRATH AUGER LINES OFFER A WIDE RANGE OF MODEL LENGTHS IN PAINTED OR GALVANIZED FINISHES. IN ADDITION THE TD-PLUS GALVANIZED LINE IS LOADED WITH OPTIONAL CHOICES. INTERNAL BEARINGS ON 6, 8 & 10" MODELS, HEAVY GAUGE FLIGHT ON 6, 8 & 10" MODELS, CORN SCREENS AVAILABLE FOR 8 & 10" MODELS. LENGTH FROM 31' TO 71'.

THE MAYRATH IN-LINE DRIVE SERIES COMBINES OPERATIONAL EFFICIENCY WITH LONG TERM DEPENDABILITY PROVIDING YOU WITH A HIGH QUALITY, GALVANIZED AUGER AT A VERY AFFORDABLE PRICE. THE REVOLUTIONARY IN-LINE DRIVE SYSTEM MINIMIZES THE NUMBER OF MOVING PARTS REDUCING DOWN TIME AND MAINTENANCE. THE IN-LINE DRIVER FEATURES AN INTERNALLY MOUNTED GEARBOX INSIDE OF AN EXPANDED, BELL SHAPED TUBE HOUSING. AVAILABLE IN DIAMETERS FROM 6" TO 12" AND LENGTHS FROM 32' TO 82'.

SWING-AWAY

THE MAYRATH SWING-AWAY PORTABLE AUGERS ARE AVAILABLE IN PAINTED OR GALVANIZED FINISHES. (PAINTED AVAILABLE IN 8" & 10" ONLY) THE SWING-AWAY FLEX HOPPER IS SECURED TO EITHER SIDE OF THE MAIN TUBE FOR TRANSPORT. ALL DRIVE COMPONENTS ENCLOSED IN OIL-BATH HOUSINGS. RELIEF DOOR IN SWING OUT HOPPER IS SECURED BY SPRING-LOADED CLIPS TO PROTECT THE MAIN AUGER FROM OVERLOADING. SPINDLE WHEEL HUBS WITH TAPERED BEARINGS PROVIDE SMOOTH, RELIABLE TRANSPORT. CHOICES OF DRIVES ARE INTERNAL GEAR OR HYDRAULIC. SIDE DRIVE ALSO AVAILABLE ON THE 8" & 10" MODELS. AVAILABLE IN 52', 62' & 72' LENGTHS AND 8", 10" & 12" DIAMETERS.

USEFUL FORMULAS AND INFO

ACRES
LENGTH X WIDTH -:- 43560
ONE ACRE = 43,560 SQ FT
405 HECTARE
ONE HECTARE = 2.471 ACRES
ONE GPA = 9.35 LTR P HECTARE
ONE MILE = 5,280 SQ FT
1.61 KILOMETERS
ONE US GALLON = 128 OUNCES
8 PINTS
4 QUARTS
3.79 LITER
.83 IMP GAL
.1337 CU FT
ONE CUBIC FOOT = 7.48 GAL
ONE LITER = 0.2642 GAL
ONE IMP GALLON = 1.2 US GALLON
277.274 CUBIC INCHES

SPRAYING SOLUTIONS OTHER THAN WATER

TANK VOLUMES:
ROUND TANK CAPACITY
DIAMETER IN INCHES SQUARED X LENGTH OR HEIGHT IN INCHES X .0034.
RECTANGULAR TANK CAPACITY
LENGTH X WIDTH X HEIGHT (INCHES) -:- 231
GALLONS PER FOOT OF ROUND TANK
DIAMETER (FT) SQUARED X 5.875

OTHER FORMULAS
CIRCUMFERENCE OF A CIRCLE
DIAMETER X 3.1416
AREA OF A CIRCLE
RADIUS SQUARED X 3.1416
AREA OF RECTANGLE OR SQUARE
LENGTH X WIDTH
AREA OF TRIANGLE
BASE X HEIGHT -:- 2
VOLUME OF CUBE OR RECTANGLE
LENGTH X WIDTH X HEIGHT
VOLUME OF A CYLINDER
RADIUS SQUARED X 3.1416 X LENGTH
VOLUME OF SPHERE
RADIUS CUBED X 4.1888
VOLUME OF CONE
RADIUS SQUARED X 1.0472

$$\text{GPM (PER NOZZLE)} = \frac{\text{GPA X MPH X W}}{5940}$$

$$\text{GPA} = \frac{\text{5940 X GPM (PER NOZZLE)}}{\text{MPH X W}}$$

$$\text{SPEED} = \frac{\text{DISTANCE (FT) X 60}}{\text{TIME (SECONDS) X 88}}$$

WEIGHT OF SOLUTION LBS. PER GALLON	SPECIFIC GRAVITY	CONVERSION FACTOR
7	0.84	0.92
8	0.96	0.98
8.34 (WATER)	1.00	1.00
9	1.08	1.04
10	1.20	1.10
10.65 (28% NITROGEN)	1.28	1.13
11	1.32	1.15
12	1.44	1.20
14	1.68	1.30

GPM = GALLON PER MINUTE
GPA = GALLON PER ACRE
MPH = MILES PER HOUR
W = WIDTH (NOZZLE SPACE INCHES)

ANHYDROUS AMMONIA (NH_3)
POUNDS PER GALLON OF NH_3 = 5.15
POUNDS OF N PER GALLON = 4.22

Spray Advantage
Fax Order Form
Fax 701-775-8217

DATE: _____

BILL TO: _____

ZIP CODE: _____

CUSTOMER NAME: _____

ADDRESS: _____

TOWN: _____

CONTACT PERSON: _____

PHONE: _____

COMMENTS: _____

_____

_____

ORDER NO: _____

SHIP TO: _____

ZIP CODE: _____

SHIP TO NAME: _____

ADDRESS: _____

TOWN: _____

PURCHASE ORDER #: _____

SHIP VIA:

_____ UPS GROUND _____CPU

_____UPS NEXT DAY _____PARCEL POST

_____MOTOR FREIGHT _____OTHER_____

QUANTITY	PART #	PAGE #	DESCRIPTION	PRICE

Spray Advantage
130 GATEWAY DR
GRAND FORKS, ND 58203

"COUNT ON US FOR SERVICE AFTER THE SALE"

SALES & PARTS 866-775-8089

Local: 701-775-8089
Fax: 701-775-8217

"EVERYTHING YOU NEED FOR FERTILIZER & CHEMICAL APPLICATION"
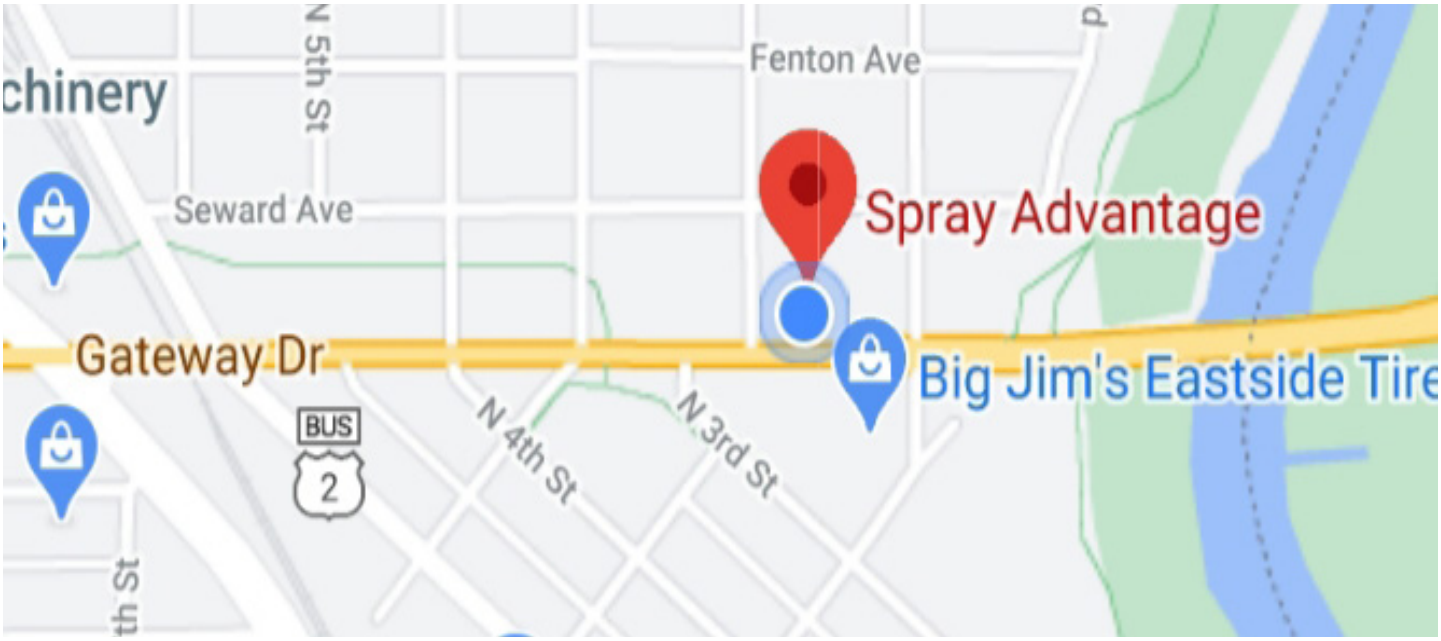
Web site: www.sprayadvantage.com E-mail: sales@sprayadvantage.com